Nice

RB500HS
RB600
RB1000

For sliding gates

EN - Instructions and warnings for installation and use

Nice

CONTENTS

GENERAL WARNINGS:
SAFETY - INSTALLATION - USE 2

1 - PRODUCT DESCRIPTION AND INTENDED USE 3

2 - OPERATING LIMITS 3

3 - INSTALLATION 4

4 - ELECTRICAL CONNECTIONS
4.1 - Types of electrical cables 10
4.2 - Electrical cable connections 10

5 - STARTING THE AUTOMATION AND CHECKING THE CONNECTIONS
5.1 - Connecting the automation to the mains electricity 12

6 - TESTING AND COMMISSIONING
6.1 - Testing 12
6.2 - Commissioning 13

7 - PROGRAMMING
GLOSSARY 14
7.1 - Programming 14
7.2 - Level 1 functions (ON-OFF functions) 14
7.3 - Level 1 programming (ON-OFF functions) 15
7.4 - Level 2 functions (adjustable parameters) 16
7.5 - Level 2 programming (adjustable parameters) 17
7.6 - Recognition of devices 18
7.7 - Recognition of the gate length 18
7.8 - Checking gate movement 18
7.9 - Pre-set functions 19
7.10 - Radio receiver 19

8 - FURTHER DETAILS
8.1 - Adding or removing devices 19
8.2 - FT210B photosensor 20
8.3 - ROBUS in “Slave” mode 21
8.4 - Recognition of other devices 22
8.5 - Connecting the Oview programmer 22
8.6 - Special functions 22
8.7 - Connecting other devices 24
8.8 - Accessories 24

9 - DIAGNOSTICS 24
9.1 - Fault log list 25
9.2 - Diagnostics and signals 25
9.2.1 - Flashing light signals 25
9.2.2 - Control unit signals 26

10 - PRODUCT DISPOSAL 27

11 - MAINTENANCE 28

12 - TECHNICAL SPECIFICATIONS 28

CE DECLARATION OF CONFORMITY 29

User manual *(end user version)* 31

GENERAL WARNINGS: SAFETY - INSTALLATION - USE (original instructions in Italian)

⚠ The following warnings are taken directly from the Regulations and apply, as far as possible, to the product described herein

CAUTION **Important safety instructions. Observe all the instructions as improper installation may cause serious damage**

CAUTION **Important safety instructions. It is important to comply with these instructions to ensure personal safety. Store these instructions**

- Before commencing the installation, check the "Product technical specifications", in particular whether this product is suitable for automating your guided part. Should it be unsuitable, DO NOT proceed with the installation
- The product cannot be used before it has been commissioned as specified in the "Testing and commissioning" chapter

CAUTION **According to the most recent European legislation, the implementation of an automation system must comply with the harmonised standards set forth in the Machinery Directive in force, which allow for declaring the presumed conformity of the automation. On account of this, all operations regarding connection to the mains electricity, as well as product testing, commissioning and maintenance, must be performed exclusively by a qualified and skilled technician!**

- Before proceeding with the product's installation, check that all materials are in good working order and are suitable for the intended applications
- The product is not intended for use by persons (including children) with reduced physical, sensory or mental capacities, nor by anyone lacking sufficient experience or familiarity with the product
- Children must not play with the appliance
- Do not allow children to play with the control devices of the product. Keep the remote controls out of reach of children

CAUTION In order to avoid any danger from inadvertent resetting of the thermal cut-off device, this appliance must not be powered through an external switching device, such as a timer, or connected to a supply that is regularly powered or switched off by the circuit

- Provide a disconnection device (not supplied) in the plant's mains power supply, with a contact opening distance that ensures complete disconnection under the conditions envisaged by Overvoltage Category III
- Handle the product with care during installation, taking care to avoid crushing, knocks, falls or contact with liquids of any kind. Keep the product away from sources of heat and open flames. Failure to observe the above can damage the product and increase the risk of danger or malfunctions. If this should happen, stop installation immediately and contact the Customer Service
- The manufacturer assumes no liability for damage to property, items or persons resulting from non-compliance with the assembly instructions. In such cases the warranty does not cover material defects
- The weighted sound pressure level of the emission A is lower than 70 dB(A)
- Cleaning and maintenance to be carried out by the user must not be effected by unsupervised children
- Before intervening on the system (maintenance, cleaning), always disconnect the product from the mains power supply
- Check the system periodically, in particular all cables, springs and supports to detect possible imbalances, signs of wear or damage. Do not use the product if repairs or adjustments are necessary, since an installation failure or an incorrectly balanced door may cause injury
- The packaging materials of the product must be disposed of in compliance with local regulations
- Keep persons away from the gate when it is moved through the control elements
- When performing a manoeuvre, keep an eye on the automated mechanism and keep all bystanders at a safe distance until the movement has been completed
- Do not operate the automation if anyone is working on it; disconnect the power supply before permitting any work to be carried out
- If the power cable is damaged, it must be replaced by the manufacturer or by the latter's technical assistance service, or by a similarly qualified person, in order to prevent any type of risk

INSTALLATION PRECAUTIONS

- Prior to installing the drive motor, check that all mechanical components are in good working order and properly balanced, and that the automation moves correctly
- If the gate or door being automated has a pedestrian gate, then the system must include a control device that will inhibit the operation of the motor when the pedestrian gate is open
- Make sure that the control devices are kept far from moving parts but nonetheless in a visible position.
  Unless a selector is used, the control devices must be installed at a height of at least 1.5 m and must not be accessible
- That windows, having a gap exceeding 200 mm when open, are to be closed using a biased-off switch if the opening movement is controlled by a fire-sensing system
- Ensure that entrapment between the driven part and the surrounding fixed parts due to the opening movement of the driven part is avoided
- Permanently fix the label concerning the manual release adjacent to its actuating member
- After installing the drive motor, make sure that the mechanism, protective system and all manual manoeuvres operate properly

1 PRODUCT DESCRIPTION AND INTENDED USE

ROBUS is a line of irreversible electromechanical gearmotors designed for automating sliding gates. These gearmotors are equipped with an electronic control unit and a connector for the SMXI or OXI radio remote control receiver (both optional). Electrical connections to external devices are simplified thanks to use of the "BLUEBUS", a technique that allows for connecting multiple devices with only 2 wires. ROBUS devices work with electricity; in case of lack of power from the mains, it is possible to release them using a suitable key and manually move the gate or use the optional accessory: PS124 back-up battery that allows for completing certain manoeuvres even when there is no mains power.

⚠ CAUTION! – Any use other than that specified herein or in environmental conditions other than those stated in this manual is to be considered improper and is strictly forbidden!

Table 1 - comparison of essential specifications of ROBUS gearmotors

	RB600 / RB600P	RB1000 / RB1000P	RB500HS	RB500HS/V1
Gate length limit (m)	8	12	8	8
Weight limit (kg)	600	1000	500	500
Power supply (V)	230	230	230	120
Power draw (A)	2.5	2.3	2.2	4.2
Power (W)	515	450	460	460
Speed (m/s)	0.31	0.28	0.44	0.44
Maximum start-up torque (Nm) corresponding to force (N)	18 600	27 900	13 360	13 360
Nominal torque (Nm) corresponding to force (N)	9 300	15 500	5,9 164	5,9 164
Cycles (cycles/hour) - gate length up to 4 m - gate length up to 8 m	 40 20	 50 25	 40 20	 40 20
IP protection rating	44	44	44	44
Ambient operating temperature (°C)	-20 ... +50	-20 ... +50	-20 ... +50	-20 ... +50
Dimensions (mm)	330 x 212 x 303 h	330 x 212 x 303 h	330 x 212 x 303 h	330 x 212 x 303 h
Weight (kg)	11	13	11	11
Control unit	RBA3	RBA3	RBA3/HS	RBA3/HS

Note: 1 kg = 9.81 N (example: 600 N = 61 kg)

⚠ Caution! Any other use or use with dimensions greater than those specified is considered non-conforming. Nice declines all liability for damage and injury resulting from non-conforming use.

2 APPLICATION LIMITS

The data relative to the performance of products of the ROBUS range are indicated in Chapter 12 "Technical specifications" and are the only values that allow for correctly assessing the product's suitability for use.
The structural characteristics of ROBUS products make them suitable for use on sliding gates, according to the limits indicated in Table 2.

The actual suitability of ROBUS to automate a specific sliding gate depends on friction and on other factors, even occasional, such as the presence of frost, which may interfere with the gate's movement.
For an actual verification it is absolutely vital to measure the force necessary to move the gate throughout its entire path and ensure that this does not exceed half of the "nominal torque" indicated in Chapter 12 "Technical specifications" (a 50% margin on the force is recommended, as unfavourable weather conditions may cause friction to increase); furthermore, it is necessary to take into account the data indicated in Table 1 to establish the number of cycles/hour, consecutive cycles and maximum speed allowed.

Chapter 12 "Technical specifications" contains the estimate of the product's "durability", that is, its average useful life. The durability value is strongly influenced by the severity of the manoeuvres, i.e. the sum of all factors that contribute to product wear. The estimate must be made by summing up all the severity indices specified in Table 2; the total result can then be compared with the estimated durability figures in the chart.
For example, ROBUS 1000 mounted on a 650 kg gate that is 5 m long, equipped with photocells and without other intensity-enhancing elements, corresponds to a severity index of 50% (30+10+10). An estimated durability of 80,000 cycles can be inferred from the chart.

Table 2 - estimated durability in relation to the manoeuvre severity index				
Severity index %	**RB600**	**RB1000**	**RB500HS RB500HS/V1**	**Durability in cycles**
Gate leaf weight (kg)				
Up to 200	10	5	30	
200 – 400	30	10	40	
400 – 500	50	20	60	
500 – 600	-	30	-	
600 – 800	-	40	-	
800 – 900	-	50	-	
900 – 1000	-	60	-	
Gate leaf length (m)				
Up to 4	10	5	15	
4 – 6	20	10	25	
6 – 8	35	20	35	
8 – 10	-	35	-	
10 – 12	-	50	-	
Other factors contributing to fatigue (to be considered if their probability exceeds 10%)				
Ambient temperature greater than 40°C or lower than 0°C, or humidity greater than 80%	10	10	10	
Presence of dust and sand	15	15	15	
Presence of salinity	20	20	20	
Manoeuvre interrupted by photocell	15	10	20	
Manoeuvre interrupted by Stop	25	20	30	
Speed greater than “L4 fast”	20	15	25	
Active peak force	25	20	25	
Total severity index %:				
Note: a severity index exceeding 100% implies that the conditions are beyond the limit of acceptability; in this case, a larger-size model is recommended.				

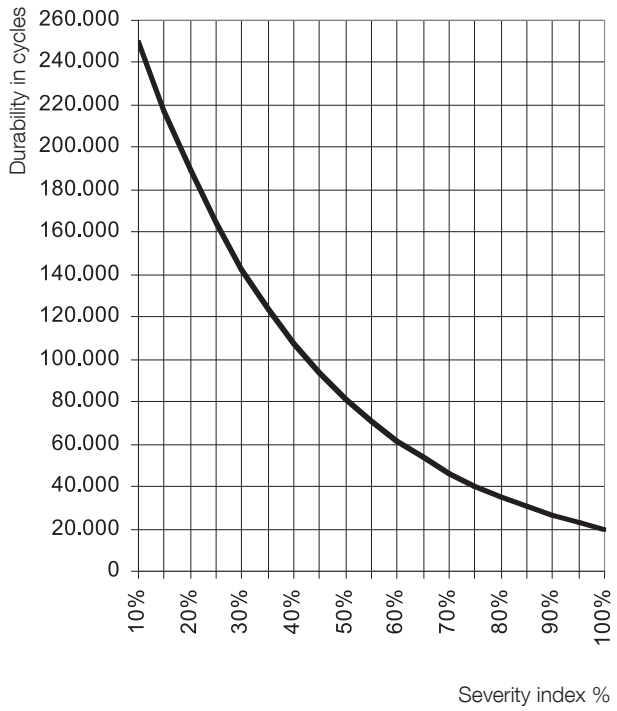

3 INSTALLATION

⚠ Important! Before installing the product, refer to Chapter 2 and Chapter 12 (technical specifications).
⚠ Verificare che la temperatura sia idonea all’ambito di applicazione.

Fig. 1 shows the contents of the package: check that everything is present and correct.

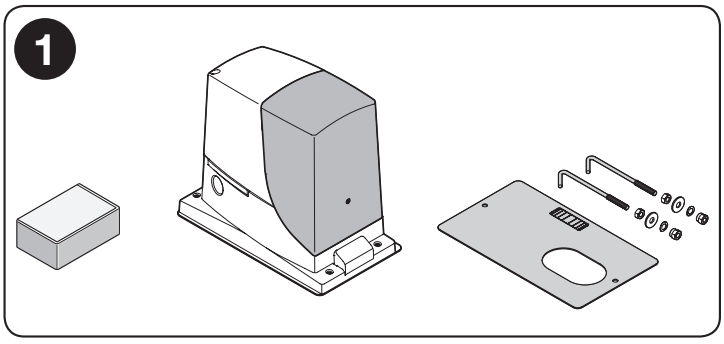

Fig. 2 shows the location of the various components of a typical installation with Nice accessories:

a - ROBUS gearmotor
b - photocells
c - posts for photocells
d - key selector / digital keypad
e - flashing light
f - rack

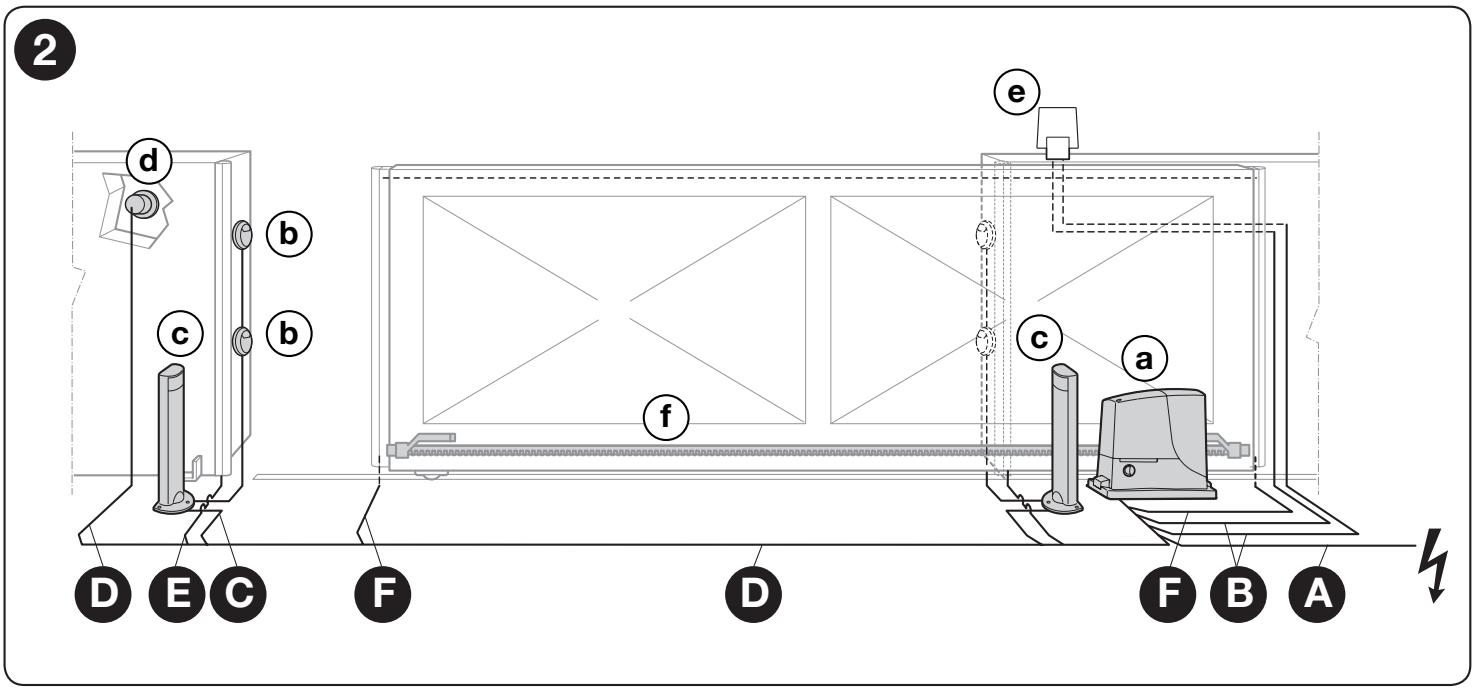

Before installing the system, check the gearmotor's overall dimensions (Fig. 3) and installation measurements (Fig. 4):

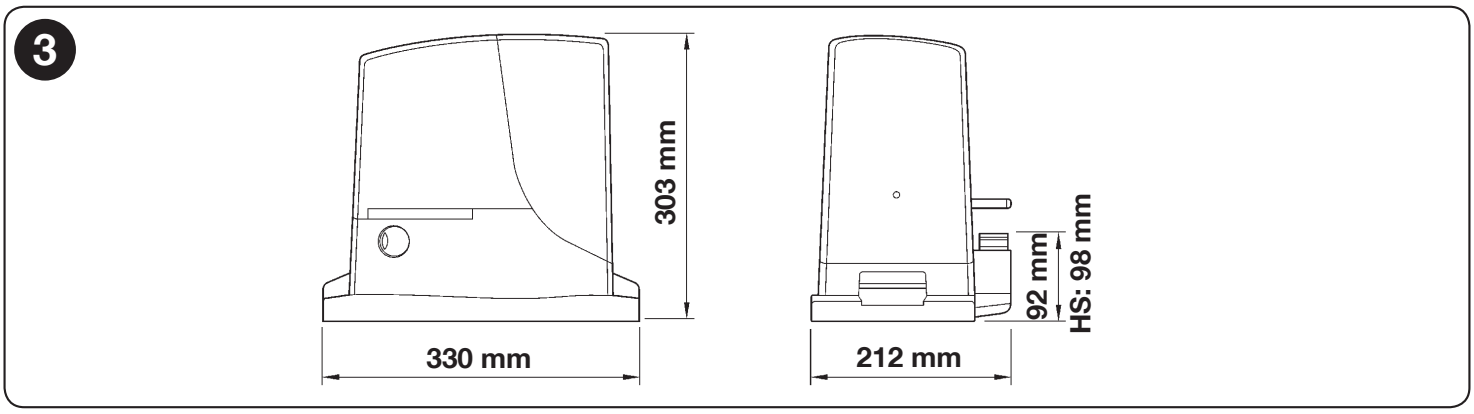

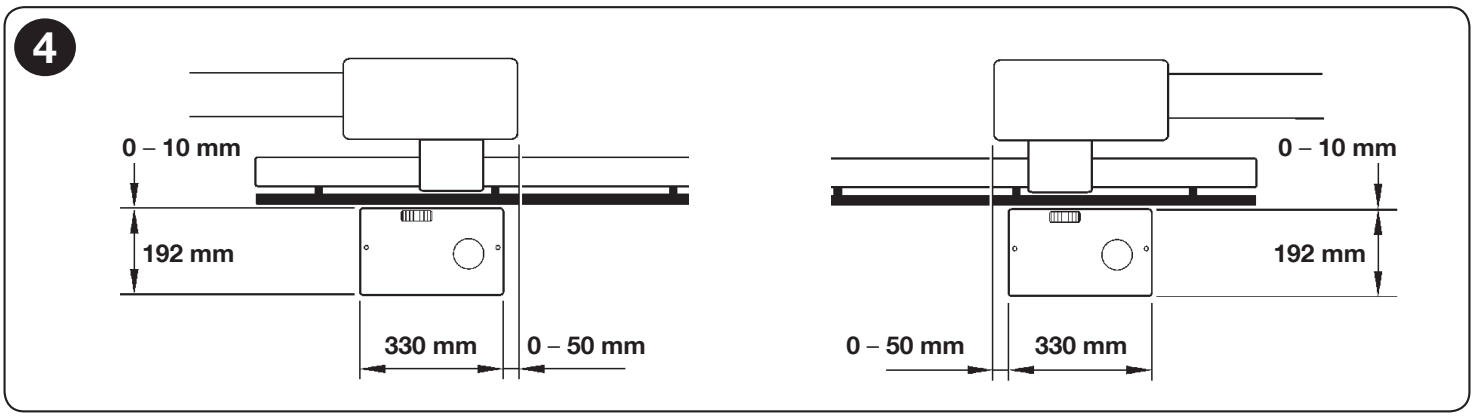

01.	Dig the foundation and arrange the tubes for the electrical cables	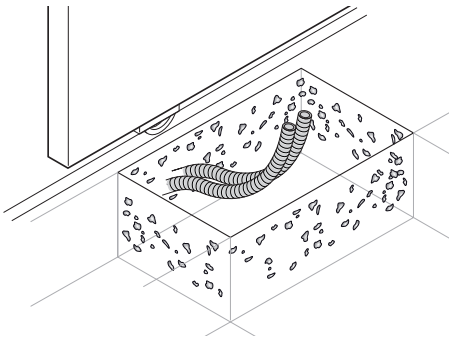

02.	Secure the two anchor bolts to the foundation plate with one nut above and one below the latter. **⚠ Tighten the lower nut in such a way that the upper thread protrudes by roughly 25/35 mm.**	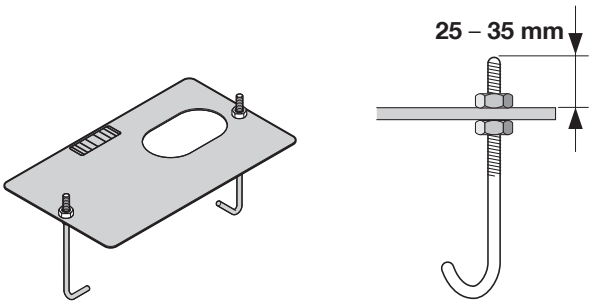
03.	Cast the concrete to secure the foundation plate. **⚠ Before the concrete hardens, make sure the foundation plate is perfectly level and parallel to the gate leaf.**	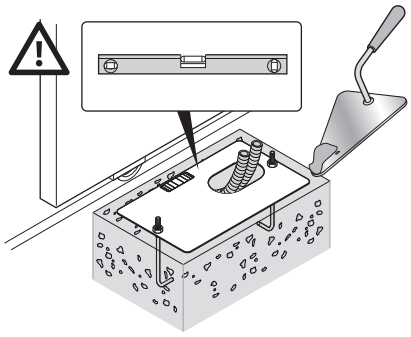
04.	Wait for the concrete to harden.	
05.	Secure the gearmotor:	
	a - remove the top nuts of the anchor bolts	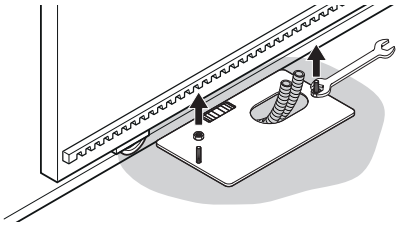
	b - place the gearmotor on the anchor bolts: make sure that it lies parallel with the gate leaf	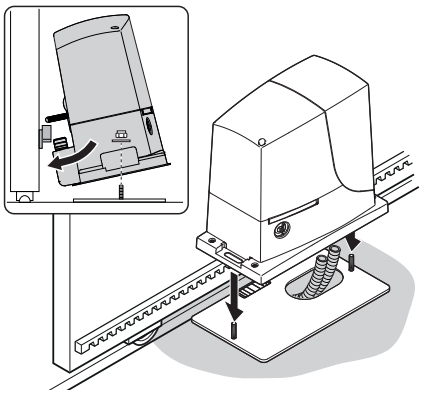
	c - insert the washers and nuts provided and tighten them slightly	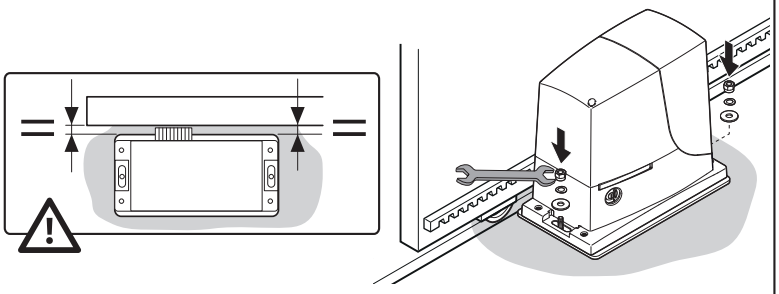

d - adjust the gearmotor's height by tightening the adjuster grub screws: position the pinion at the right height by leaving a gap of 1–2 mm from the rack (this so as to prevent the gate leaf weight from bearing on the gearmotor)

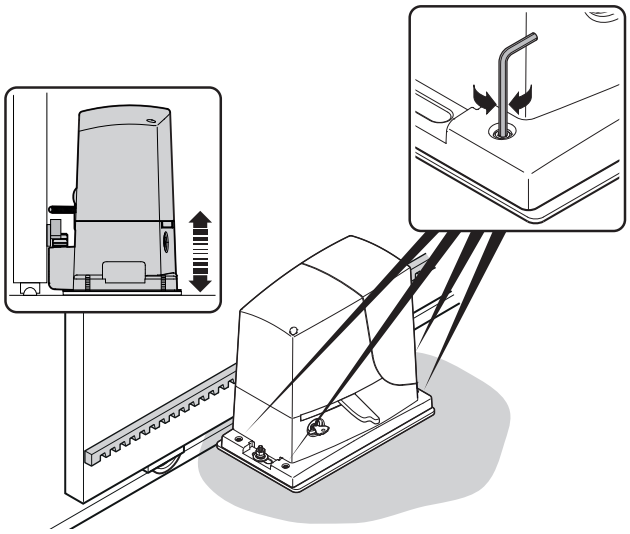

e / f / g - release the gearmotor

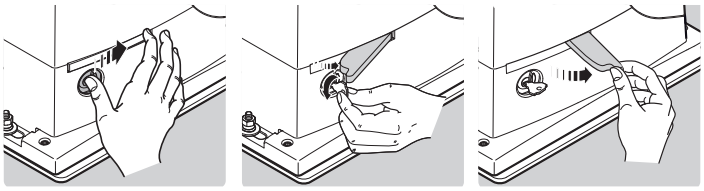

h - manually open the gate leaf fully

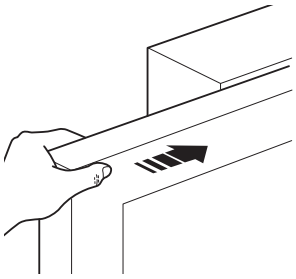

i - place the first section of the rack on the gearmotor's pinion: make sure that it corresponds to the start of the gate leaf and that there is a gap of 1–2 mm between the rack and the pinion (this so as to prevent the gate leaf weight from bearing on the gearmotor)

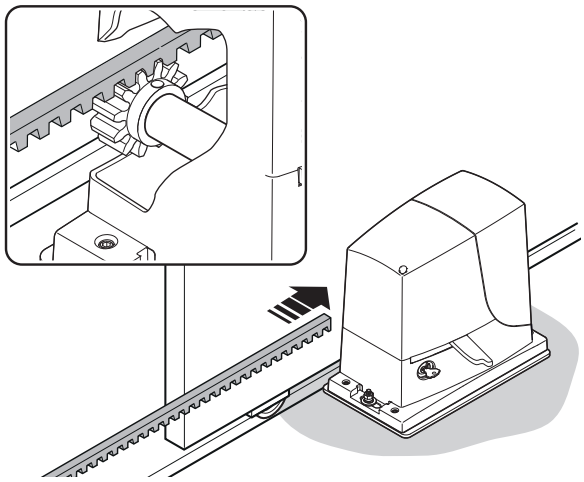

l - secure the rack section

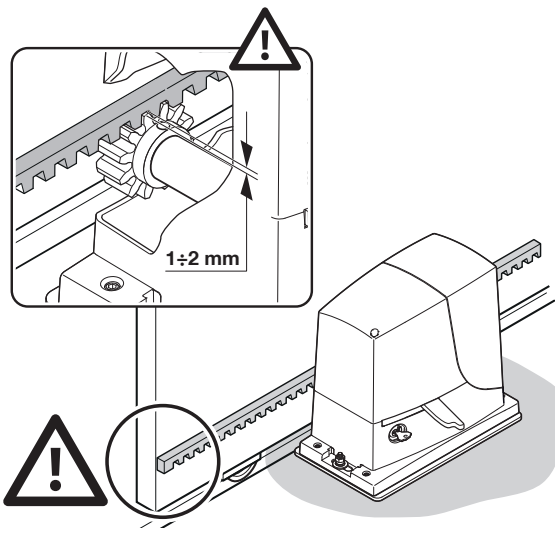

m - slide the gate by hand and, using the pinion as a reference, secure the other sections of the rack

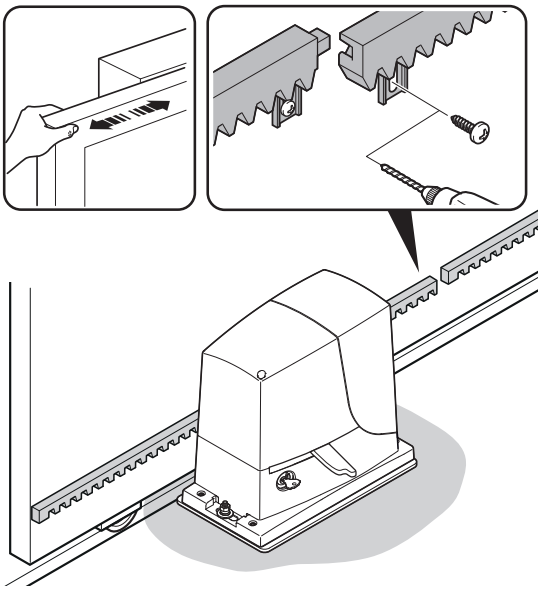

n - cut any excess rack off the end

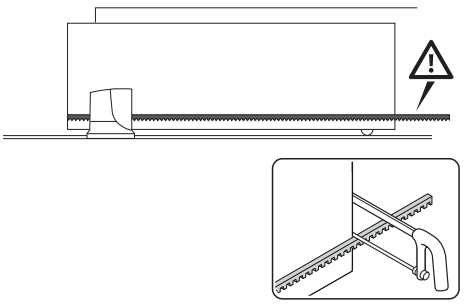

06. Slide the gate open and closed by hand to check that the rack is properly aligned with the pinion.

N.B.: make sure that there is a gap of 1–2 mm between the rack and pinion for the entire length of the gate

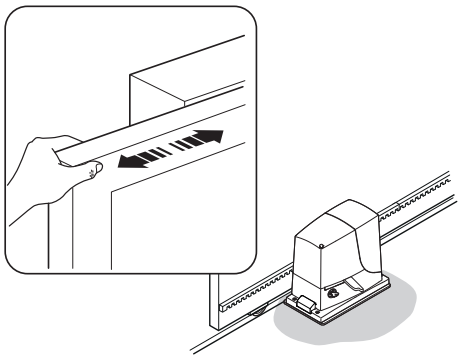

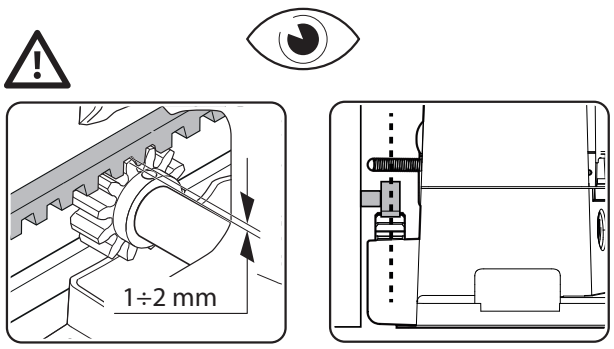

07. Strongly tighten the nuts for fixing the gearmotor to the foundation plate and cover the nuts with the relevant caps

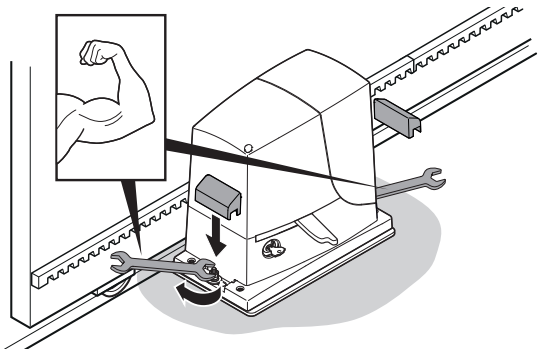

08. Secure the OPEN and CLOSE limit switch bracket: perform the same operations for both limit switches

⚠ For the **RB600P** and **RB1000P** versions with inductive proximity limit switch, the optimal distance of the bracket is between 3 and 8 mm

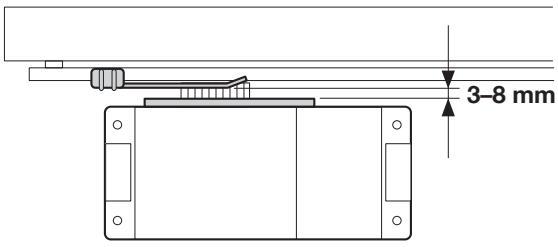

OPEN:

a - slide the gate leaf open by hand, stopping it 2/3 cm before the mechanical stop

b - slide the limit switch bracket along the rack in the open direction until the limit switch intervenes (a “click” will be heard)

c - after hearing the “click”, move the bracket further forward by 2 cm (minimum)

d - secure the bracket to the rack with the grub screws provided

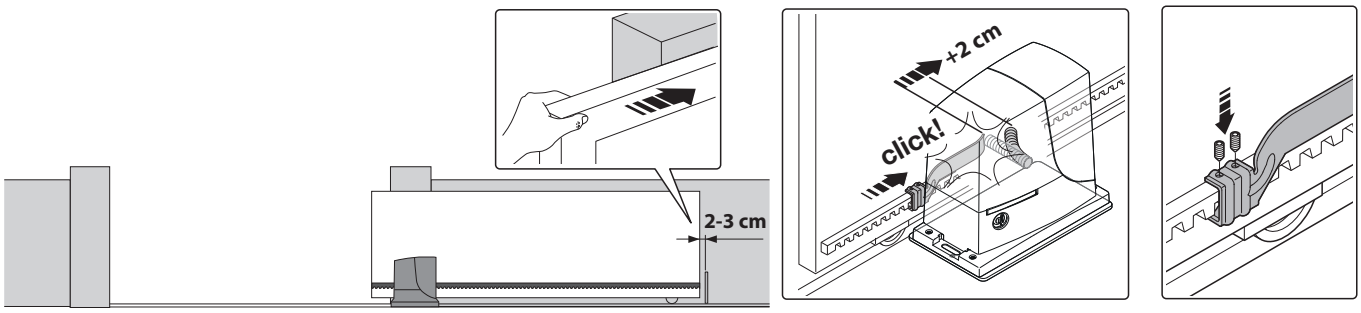

CLOSE:

a - slide the gate leaf closed by hand, stopping it 2/3 cm before the mechanical stop

b - slide the limit switch bracket along the rack in the close direction until the limit switch intervenes (a “click” will be heard)

c - after hearing the “click”, move the bracket further forward by 2 cm (minimum)

d - secure the bracket to the rack with the grub screws provided

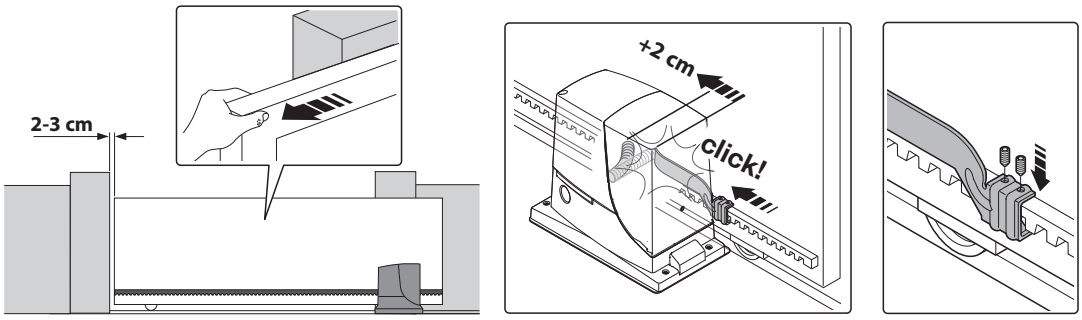

09. Manually lock the gearmotor

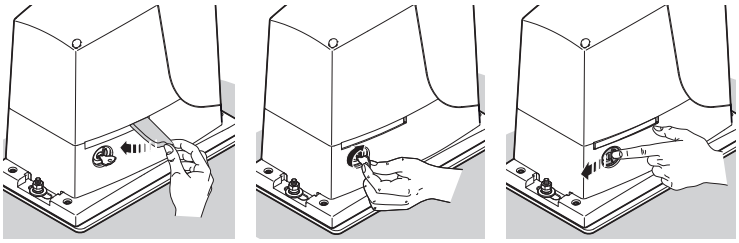

10. Apply the adhesive label showing the release instructions

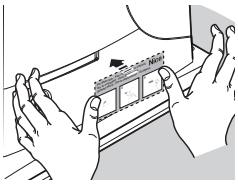

To install the devices belonging to the system, refer to the respective instruction manuals.

⚠ **IMPORTANT! – The gearmotor is configured (factory setting) for installation on the right-hand side (Fig. 5); to install it on the left-hand side, perform the operations shown in Fig. 6.**

5

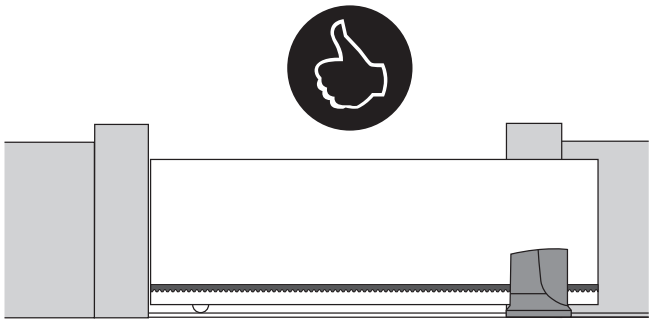

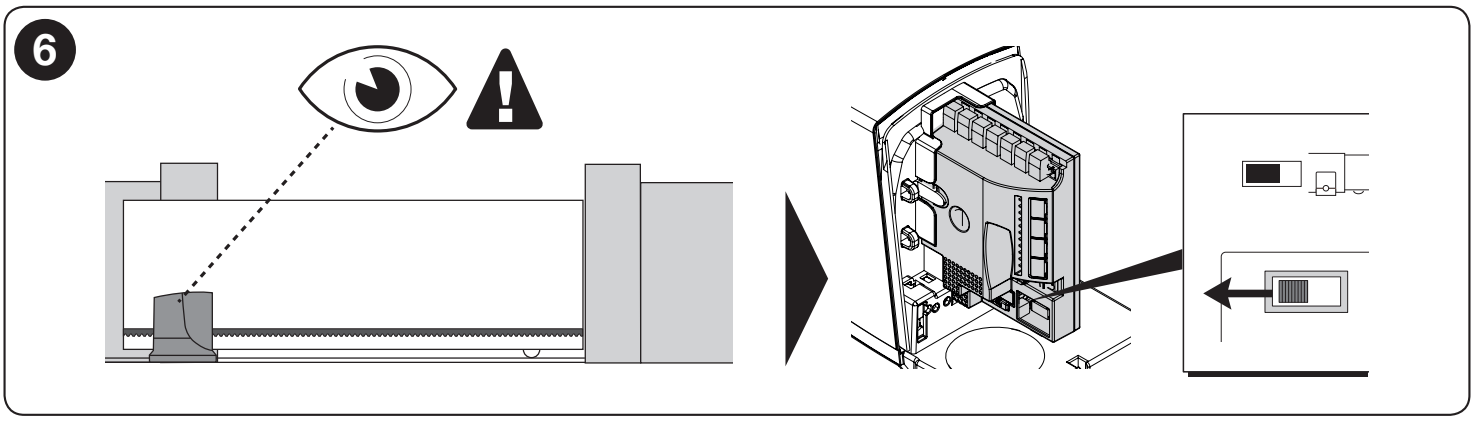

4 ELECTRICAL CONNECTIONS

⚠ CAUTION! – All electrical connections must be made with the system disconnected from the power supply. Incorrect connections can cause damage to the equipment and injury to people.

⚠ CAUTION! – The cables used must be suited to the type of installation; for example a type-H03VV-F cable is recommended for indoor environments, and a type-H07RN-F cable for outdoor environments.

Fig. 2 shows the electrical connections in a typical installation; Fig. 7 shows the connections to be made on the control unit.

4.1 - Types of electrical cables

Table 3 - Types of electrical cable (see Fig. 2)

	Connection	Type of cable	Maximum length
A	POWER SUPPLY	1 cable: 3 x 1.5 mm²	30 m *
B	FLASHING LIGHT WITH AERIAL	1 cable: 2 x 0.5 mm² 1 type-RG58 shielded cable	20 m 20 m (recommended < 5 m)
C	PHOTOCELLS	1 cable: 2 x 0.25 mm²	30 m **
D	KEY SELECTOR	2 cables: 2 x 0.5 mm² ***	50 m
E	FIXED EDGES	1 cable: 2 x 0.5 mm² ****	30 m
F	MOVABLE EDGES	1 cable: 2 x 0.5 mm² ****	30 m *****

* If the power supply cable is longer than 30 m, a cable with larger gauge is required, e.g. 3 x 2.5 mm², and a safety earthing system must be arranged near the automation.
** If the "BLUEBUS" cable is longer than 30 m, up to maximum 50 m, a 2 x 1 mm² cable is required.
*** The two 2 x 0.5 mm² cables can be replaced by a single 4 x 0.5 mm² cable.
**** If more than one edge is present, refer to Paragraph 8.1 "STOP Input" for the type of connection recommended.
***** Special devices, which enable connection even when the leaf is moving, must be used to connect movable edges to sliding leaves.

4.2 - Electrical cable connections: Fig. 7

Table 4 - Description of electrical connections

Function	Description
FLASH	- output for connecting a Nice flashing light (see models under "TECHNICAL SPECIFICATIONS" on page 28). During the manoeuvre, the light flashes 0.5 seconds on and 0.5 seconds off
OGI	- "Gate Open Indicator" output; a 24 V (max. 4 W) signal light can be connected. It can also be programmed for other functions; refer to Paragraph 7.4 "Level 2 functions"
BLUEBUS	- this terminal allows for connecting compatible devices; all are connected in parallel with just two wires conveying both the power and the communication signals. Further information on the BLUEBUS appears in Paragraph 8.1 "BLUEBUS"
STOP	- input for the devices that block or even stop the current manoeuvre; contacts like "Normally Closed", "Normally Open" or constant resistance devices can be connected through special arrangements on the input
Sbs	- input for devices that control movement in Step-Step mode; it is possible to connect "Normally Open" contacts
OPEN	- input for devices that control the opening movement only; it is possible to connect "Normally Open" contacts
CLOSE	- input for devices that control the closing movement only; it is possible to connect "Normally Open" contacts
AUX_IN	- input for devices that block or stop the manoeuvre in progress; Normally Closed (NC) contacts can be connected to this input; using Oview, the input function can be changed; the input is factory configured to ALT
AERIAL	- input for connecting the aerial for the radio receiver (the aerial is incorporated on LUCY B)

To make the electrical connections, proceed as described below and refer to Fig. 7:

01.	Open the cover: loosen the screw and raise the cover
02.	Feed the power cable through the relevant hole (leave 20/30 cm of free cable) and connect it to the relevant terminal clamp
03.	Feed the cables of the devices to be installed or already present in the system through the relevant hole (leave 20/30 cm of free cable) and connect them to their terminal clamps as shown in Fig. 7
04.	Before closing the cover, program the system: Chapter 7
05.	Close the cover with the relevant screw

7

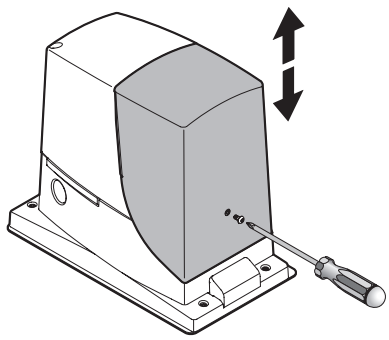

SELECTOR	DIRECTION SELECTOR	**OGI**	GATE OPEN INDICATOR
KEYS	PROGRAMMING AND CONTROL KEYS	**TX - RX**	PHOTOCELLS
LED	FUNCTION LEDS	**STOP NO-NC-8K2**	STOP SENSITIVE EDGE
RECEIVER	RADIO RECEIVER	**SBS**	STEP BY STEP
AERIAL	AERIAL	**OPEN**	OPEN
FUSE	FUSE	**CLOSE**	CLOSE
FLASH	FLASHING LIGHT	**AUX_IN**	AUXILIARY INPUT

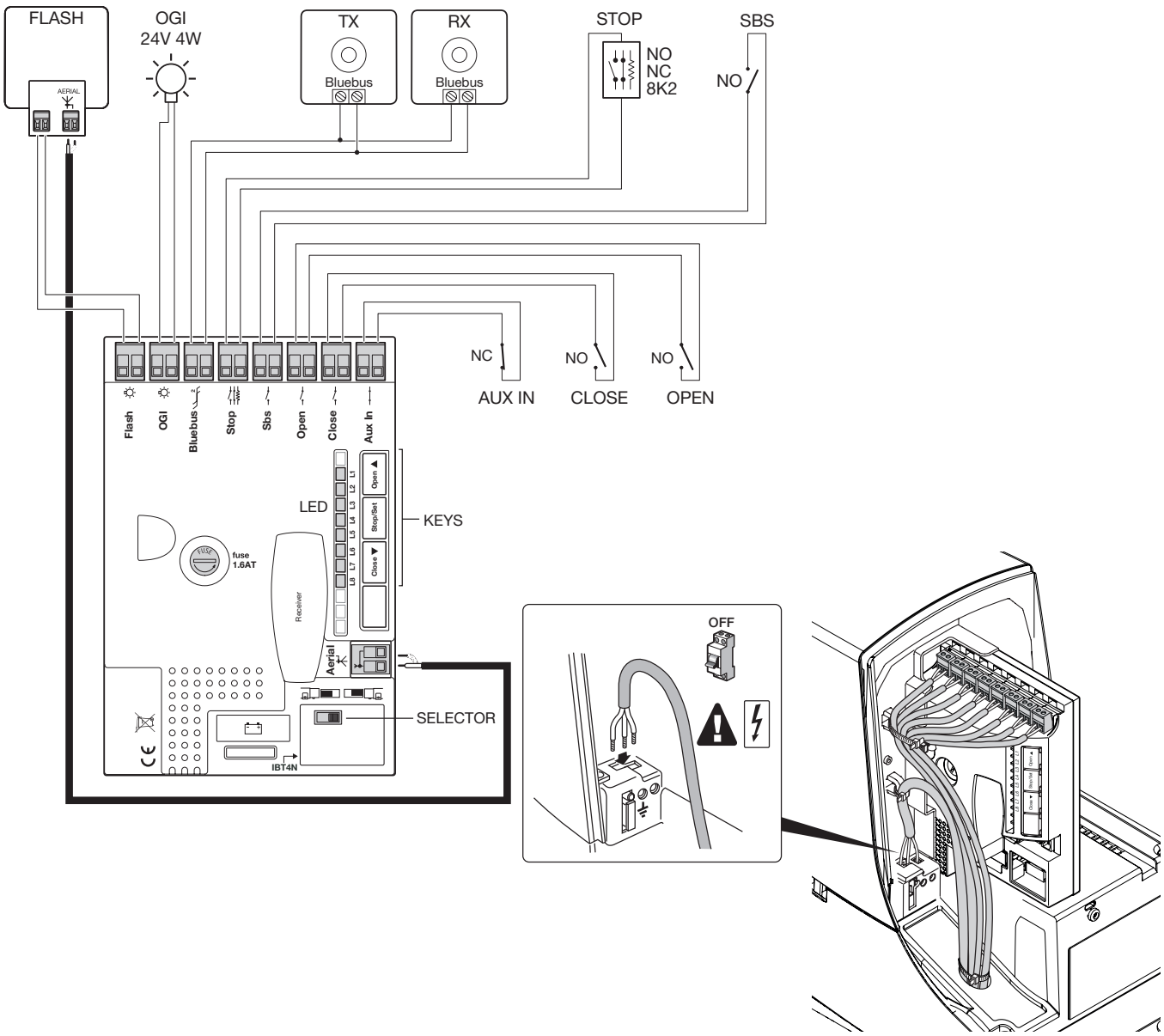

5 STARTING THE AUTOMATION AND CHECKING THE CONNECTIONS

5.1 - Connecting the automation to the mains electricity

⚠ CAUTION! – The automation must be connected to the mains electricity by an expert and qualified electrician, in accordance with established laws, standards and local regulations.

Proceed as described below

01.	Manually release the gearmotor so that the gate can be opened and closed 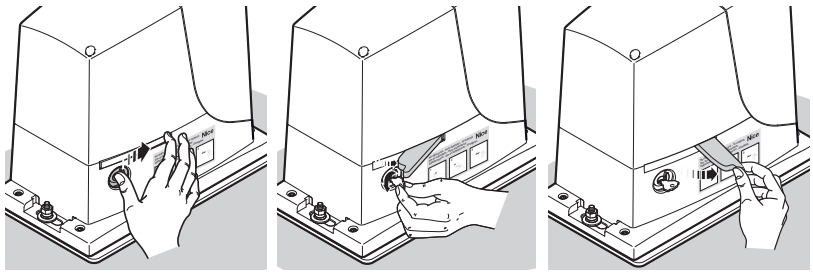
02.	Move the gate leaf to the halfway position of its path
03.	Manually lock the gearmotor 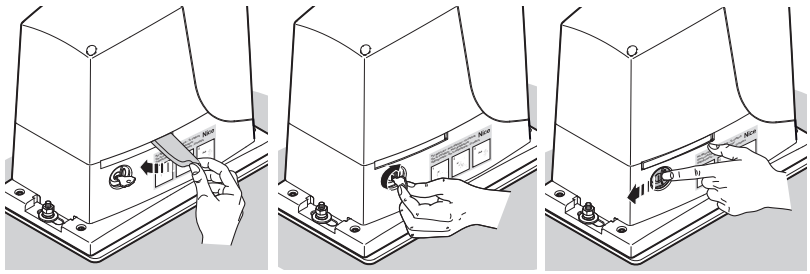
04.	power the automation and verify: - that the BLUEBUS LED flashes regularly at the frequency of one flash per second - that the LEDs on the photocells flash (both on TX and RX); the type of flashing is not important as it depends on other factors - that the flashing light connected to the FLASH output and the indicator light connected to the “Gate Open Indicator” output are ON 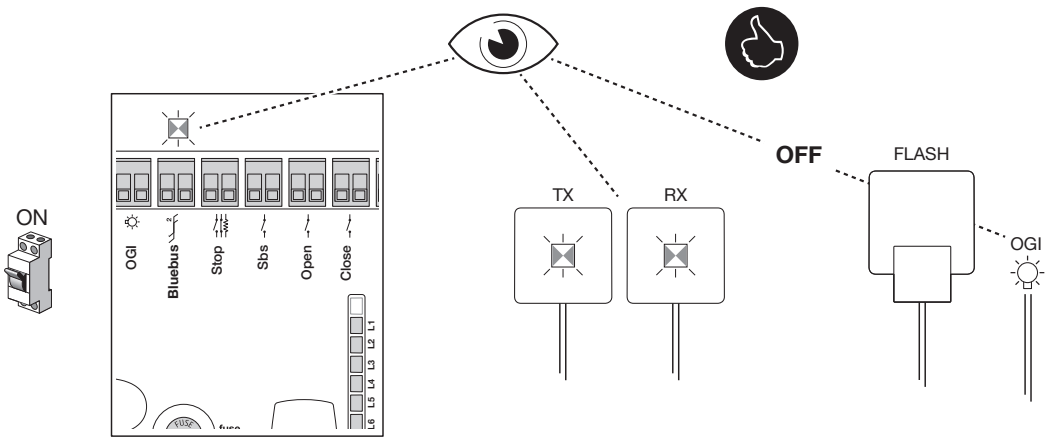
⚠	if any of these conditions are not satisfied, proceed as follows (step 05)
05.	Shut off the mains power to the automation and check the electrical connections, photocell alignment and fuses

6 TESTING AND COMMISSIONING

These are the most important phases in the automation’s arrangement to ensure maximum system safety.
They must be carried out by a qualified and expert technician who must define the necessary tests to verify the solutions adopted to counter any risks present, and check compliance with laws, regulations, standards: in particular, all the requirements of the EN 13241-1, EN 12445 and EN 12453 standards.
Any supplementary equipment must be tested separately for its operation and for correct interaction with ROBUS: refer to the respective user manuals.

6.1 - Testing

The testing procedure can also be performed as a periodic check of the automation devices. Each component of the system (sensitive edges, photocells, emergency stop, etc.) requires a specific testing phase; for these devices, observe the procedures given in the respective instruction manuals.

Run the test as follows:

01.	Ensure that all specifications in the “WARNINGS” chapter have been strictly observed
02.	Release the gearmotor and verify whether it is possible to manually move the gate in both directions (open and close) with a force no greater than the value corresponding to the usage limits shown in Table 1 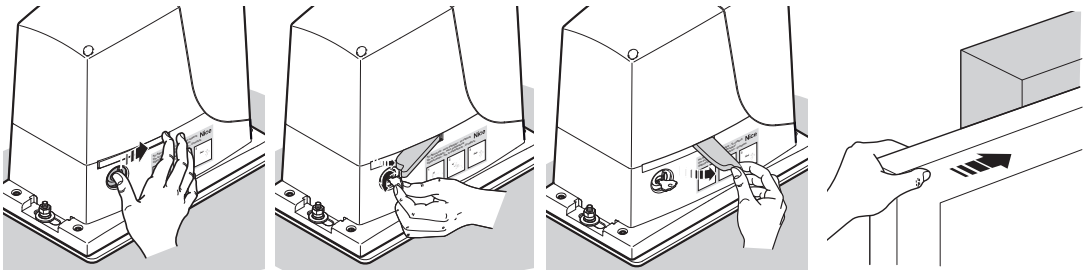
03.	Lock the gearmotor 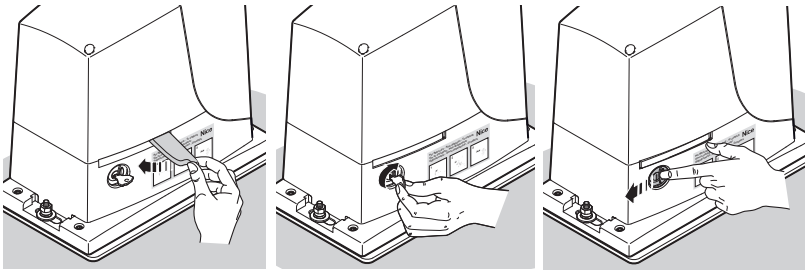
04.	Using the key switch, control key or radio transmitter, test the opening and closing of the gate and make sure that it moves in the intended direction
05.	The test should be carried out several times to verify that the gate moves smoothly, that there are no points of excessive friction and that there are no defects in the assembly or adjustment
06.	Verify the correct operation of each safety device present in the system (photocells, sensitive edges, etc.)
07.	Check the operation of the photocells and any interference with other devices: 1 - pass a cylinder with 5 cm diameter and 30 cm length along the optical axis, first close to the TX then to the RX 2 - check that the photocells intervene in any condition, switching from active status to alarm status and vice-versa 3 - check that the photocell’s intervention determines the intended response of the control unit: for example, it causes the movement to invert during the closing manoeuvre 4 - Whenever a device intervenes, the “BLUEBUS” LED on the control unit must flash 2 times more quickly, confirming that the control unit recognises the event
08.	If the dangerous situations caused by the gate’s movement have been safeguarded by limiting the impact force, the installer must measure the impact force according to the EN 12453 standard If the “Speed” adjustment and “Motor Force” control are used to assist the system in reducing the impact force, try to find the adjustments that provide the best results

6.2 - Commissioning

Commissioning can only take place after all testing phases have been terminated successfully (Paragraph 6.1).
Partial or “makeshift” commissioning is strictly prohibited.

01.	Prepare and store (for at least 10 years) the automation’s technical documentation. This must include at least: an assembly drawing of the automation, a wiring diagram, analysis of risks and relative solutions adopted, manufacturer’s declaration of conformity for all devices installed (for ROBUS use the annexed CE Declaration of Conformity); a copy of the automation system instruction manual and maintenance schedule
02.	Using the key selector or transmitter, test the opening and closing of the gate and make sure that it moves in the intended direction
03.	Fill in the declaration of conformity of the automation and hand it to the owner
04.	Hand over to the owner the “User Manual” (pull-out insert)
05.	Prepare and hand to the owner the maintenance schedule of the automation
06.	The force adjustment is an important safety factor and must be done with the utmost care by an qualified technicians. **Important!** - Adjust the force sufficiently to enable the gate to move as intended; higher force values to those necessary for moving the gate can cause injury to animals and persons or damage to property if the gate collides with an obstacle
07.	Before commissioning the gate, inform the owner adequately and in writing about the attendant residual risks

7 PROGRAMMING

In this manual the programming procedures are explained with the use of icons and their meanings are given in the following glossary:

GLOSSARY			
Symbol	**Description**	**Symbol**	**Description**
	LED on		correct procedure
	LED off		INCORRECT procedure
	short flashing LED	▲	“OPEN” button = opening
	long flashing LED	▼	“CLOSE” button = closure
	very fast flashing LED	**Stop/Set**	“STOP” button = stop “Set” button = used for programming
ON	supply mains power		press and hold key
OFF	shut off mains power		release key
	wait ...		press and release the key

7.1 - Programming

A number of programmable functions are available on the ROBUS control unit. The functions are adjusted using 3 keys on the control unit: **[▲]**, **[Stop/Set]**, **[▼]** and are displayed through 8 LEDs: **L1….L8**.

Keys	Function
▲	The “**OPEN**” key enables the user to control opening of the gate or move the programming point upwards
Stop/ Set	The “**STOP/SET**” button allows for stopping the manoeuvre. If pressed for more than 5 seconds, it allows for entering the programming mode
▼	The “**CLOSE**” key enables the user to close the gate or move the programming point downwards

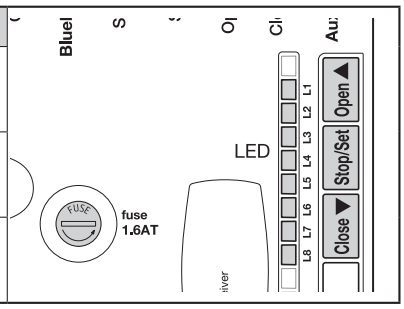

7.2 - Level 1 functions (ON-OFF functions)

The programmable functions available on ROBUS are arranged on 2 levels:

Level 1: the functions can be adjusted in ON-OFF mode (active or not active); in this case, each LED **L1….L8** indicates a function; if on, the function is active and if off, the function is not active; see Table 5.

Table 5 - Programmable functions: Level 1		
LED	**Function**	**Description**
L1	Automatic closing	This function causes the gate to close automatically after the programmed pause time has lapsed. The factory-set Pause Time is 30 seconds, but it can be modified to 5, 15, 30, 45, 60, 80, 120 or 180 seconds. If the function has not been activated, the “semi-automatic” mode applies
L2	Close after photo	This function enables the gate to be kept open for the necessary transit time only. The “Photo” always causes an automatic re-closure with a pause time of 5 seconds (regardless of the programmed value) The behaviour changes depending on whether the “Automatic closing” function is active or not

		When "Automatic closing" is not active: the gate always reaches the fully open position (even if the Photo disengages first). The disengagement of Photo activates automatic re-closure with a pause of 5 seconds **When "Automatic closing" is active:** the opening manoeuvre stops immediately after the photocells have disengaged. After 5 seconds, the gate will begin to re-close automatically. The "Close after photo" function is always disabled in manoeuvres interrupted by a Stop command If the "Close after photo" function is inactive, the pause time is that which has been programmed or there will be no automatic re-closing if the function is inactive
L3	Always close	The "Always close" function will intervene, and the gate will close, if the open gate status is detected when the power supply returns. For safety reasons, the manoeuvre is preceded by 5 seconds of flashing. If the function is not active when the power supply returns, the gate will remain still
L4	Stand-by	This function allows for minimising consumption and is particularly useful in cases when the back-up battery is used. If this function is enabled, 1 minute after completion of the manoeuvre the control unit turns off the BLUEBUS output (and therefore all devices) and all LEDs, with the exception of the BLUEBUS LED, which flashes at a slower speed. When a command arrives, the control unit will restore complete functioning. If this function is inactive, there will be no reduction in consumption
L5	Peak	If this function is activated, the gradual acceleration at the beginning of each manoeuvre will be disengaged; it allows for having peak thrust and is useful whenever static friction is high, e.g. if snow or ice are blocking the gate. If the peak is inactive, the manoeuvre will start with a gradual acceleration
L6	Pre-flashing	With the pre-flashing function, a 3-second pause is added between the flashing light switch-on and the start of the manoeuvre, in order to warn the user in advance of a potentially dangerous situation. If pre-flashing is inactive, the flashing light will switch on when the manoeuvre starts
L7	"Close" becomes "Partial open"	Activating this function, the "CLOSE" input activates a partial opening manoeuvre (see LED L6 in table 7)
L8	"Slave" mode	With this option, ROBUS becomes a "Slave": this allows for synchronising two motors on opposing gate leaves, with one motor functioning as a Master and one as Slave; for further information, see Paragraph 8.3 "ROBUS in "Slave" mode

During normal operation of ROBUS, LEDs **L1….L8** are on/off in relation to the status of the respective function; for instance, L1 is on when "Automatic closing" is active.

7.3 - Level 1 programming (ON-OFF functions)

By default, Level 1 functions are all set to "OFF", but can be modified at any time as described in Table 6. Take care during modification procedures, as there is a maximum time interval of 10 seconds between pressing of different keys; otherwise the procedure terminates automatically and stores the changes made up to that time.

Table 6 - Changing the ON-OFF Functions		Example
01.	Press and hold the **[Stop/Set]** key for roughly 3 seconds	Stop/Set 3s
02.	Release the **[Stop/Set]** key when LED L1 starts flashing	L1 Stop/Set
03.	Press and release the **[▲]** or **[▼]** key to shift LED flashing on the desired "LED" (L1...L8 - Table 5)	Open or Close
04.	Press and release the **[Stop/Set]** key to change the status of the function (short flashing = OFF; long flashing = ON)	Stop/Set OFF ON
05.	Wait 10 seconds to exit the programming mode after the maximum time interval	10s
N.B.: points 3 and 4 can be repeated during the same programming phase to set other functions to ON or OFF.		

7.4 - Level 2 Functions (adjustable parameters)

Level 2: the parameters can be adjusted on a scale of values (from 1 to 8); in this case, each of the LEDs **L1….L8** indicates the set value among 8 possible settings; refer to Table 7.

Table 7 - Programmable functions: Level 2

LED	Parameter	Level	Value	Description
Note: the parameters with a grey background are factory settings				
L1	Pause Time	**L1**	5 s	Adjusts the pause time, that is, the time that elapses before automatic re-closure. Is effective only if automatic closure is enabled
		L2	15 s	
		L3	30 s	
		L4	45 s	
		L5	60 s	
		L6	80 s	
		L7	120 s	
		L8	180 s	
L2	Step-by-Step function	**L1**	Open - Stop - Close - Stop	Adjusts the sequence of commands associated with the Step-by-Step input or the 1st radio command
		L2	Open - Stop - Close - Open	
		L3	Open - Close - Open - Close	
		L4	Apartment block	
		L5	Apartment block 2 (more than 2” generates stop)	
		L6	Step-by-Step 2 (less than 2” causes partial opening)	
		L7	Hold-to-run	
		L8	“Semi-automatic” opening, “hold-to-run” closing	
L3	Motor speed	**L1**	Very slow	Adjusts the motor speed during normal travel. MODEL 500HS: factory setting = L5
		L2	Slow	
		L3	Medium	
		L4	Fast	
		L5	Very fast	
		L6	Extremely fast	
		L7	Opens “Fast”, Closes “Slow”	
		L8	Opens “Extremely fast”, Closes “Fast”	
L4	OGI output	**L1**	“Gate Open Indicator” (G.O.I.) function	Adjusts the function associated with OGI output (whatever the associated function, the output supplies a voltage of 24V ⎓ (-30% +50%) with a maximum power of 4 W when active)
		L2	On if gate closed	
		L3	On if gate open	
		L4	Active with radio output no. 2	
		L5	Active with radio output no. 3	
		L6	Active with radio output no. 4	
		L7	Maintenance indicator	
		L8	Electric lock	
L5	Motor force	**L1**	Ultra-light gate	Adjusts the system that controls the motor force in order to adapt it to the weight of the gate. The force control system also measures the ambient temperature, automatically increasing the force in the event of particularly low temperatures
		L2	Very light gate	
		L3	Light gate	
		L4	Average gate	
		L5	Medium-heavy gate	
		L6	Heavy gate	
		L7	Very heavy gate	
		L8	Ultra-heavy gate	
L6	Partial open	**L1**	0.5 m	Adjusts the measurement of the partial opening. Partial opening can be controlled with the radio command no. 2 or with “CLOSE”, if the “Close” function is present, this becomes “Partial open”
		L2	1 m	
		L3	1.5 m	
		L4	2 m	
		L5	2.5 m	

		L6	3 m	
		L7	3.4 m	
		L8	4 m	
L7	Maintenance notification	**L1**	Automatic (depending on the severity of the manoeuvre)	Controls the number of manoeuvres after which the automation maintenance notification is sent (see Paragraph 8.5 “Maintenance notification”)
		L2	1000	
		L3	2000	
		L4	4000	
		L5	7000	
		L6	10000	
		L7	15000	
		L8	20000	
L8	List of faults	**L1**	Result of 1st manoeuvre (most recent)	Allows for verifying the type of fault occurring in the last 8 manoeuvres (see Paragraph 9.1 “Fault log list”)
		L2	Result of 2nd manoeuvre	
		L3	Result of 3rd manoeuvre	
		L4	Result of 4th manoeuvre	
		L5	Result of 5th manoeuvre	
		L6	Result of 6th manoeuvre	
		L7	Result of 7th manoeuvre	
		L8	Result of 8th manoeuvre	

All the parameters can be adjusted as required without any contraindications; only the adjustment of the “Motor Force” could require special attention:
• Do not use high force values to compensate for points of abnormal friction on the leaf. Excessive force can compromise the operation of the safety system or damage the leaf.
• If the “Motor Force” control is used to assist the impact force reduction system, measure the force again after each adjustment in compliance with the EN 12453 standard.
• Wear and weather conditions may affect the movement of the gate, therefore periodic force readjustments may be necessary.

7.5 - Level 2 programming (adjustable parameters)

The adjustable parameters are factory set as shown in Table 7 with: “ ” but can be modified at any time as shown in Table 8. Take care during modification procedures, as there is a maximum time interval of 10 seconds between pressing of different keys; otherwise the procedure terminates automatically and stores the changes made up to that time.

Table 8 - Changing the adjustable parameters		Example
01.	Press and hold the **[Stop/Set]** key for roughly 3 seconds	Stop/Set 3s
02.	Release the **[Stop/Set]** key when LED L1 starts flashing	L1 Stop/Set
03.	Press and release the **[▲]** or **[▼]** key to shift LED flashing on the desired “LED” (L1...L8 - Table 7)	Open ▲ or Close ▼
04.	Press and hold the **[Stop/Set]** key, which must be kept pressed throughout all steps 5 and 6	Stop/Set
05.	Wait approx. 3 seconds after which the LED associated with the current level of the parameter to be modified will light up	
06.	Press and release the **[▲]** or **[▼]** key to shift the LED that represents the value of the parameter	Open ▲ or Close ▼
07.	Release **[Stop/Set]**	Stop/Set
08.	Wait 10 seconds to exit the programming mode after the maximum time interval	10s
N.B.: points 3 to 7 can be repeated during the same programming phase to modify other parameters.		

7.6 - Recognition of devices

After connecting up the power supply, the control unit must be made to recognise the devices connected up to the BLUEBUS and STOP inputs. Before this phase, LEDs L1 and L2 will flash to indicate that recognition of the devices must be carried out.

01.	Press and hold **[▲]** and **[Stop/Set]**	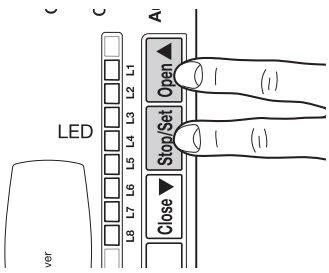
02.	Release the keys when LEDs L1 and L2 start to flash quickly (after roughly 3 seconds)	
03.	Wait a few seconds until the control unit has completed the device recognition procedure	
04.	Once the recognition stage has been completed, the STOP LED must remain on, while LEDs L1 and L2 will switch off (LEDs L3 and L4 may start flashing)	

The recognition phase of connected devices can be repeated at any time, even after installation (for example, if an additional device is installed); to complete a new recognition procedure see Paragraph 8.4 “Recognition of other devices”.

7.7 - Recognition of the gate length

Once the devices have been recognised, LEDs L3 and L4 will start flashing; this means that the control unit must recognise the length of the gate leaf (distance between the closing limit switch and the opening limit switch); this measurement is necessary to calculate the deceleration points and the partial opening point.

01.	Press and hold **[Stop/Set]** and **[▼]**	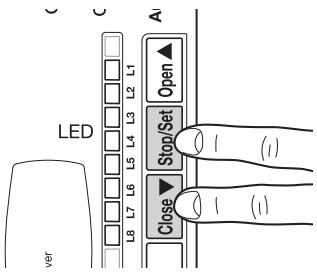
02.	Release the keys when the manoeuvre starts (after approx. 3 seconds)	
03.	Check that the current manoeuvre is an opening manoeuvre, otherwise press **[Stop/Set]** and carefully check Chapter 3 (Figures 5 and 6); then repeat the sequence from Point 1	
04.	Wait for the control unit to fully complete the gate opening manoeuvre until the opening limit switch; the closing manoeuvre will start immediately afterwards	
05.	Wait for the control unit to fully close the gate	

Gate leaf length recognition mode 2 for model 500HS

This allows for configuring:

- “Deceleration” at the 10 cm mark during opening and closing;
- The “motor speed set-up” for opening and closing at 100% (ultra-fast mode, see Table 8).

This operating mode activates during the device recognition phase, by pressing and holding the **[Stop/Set]** and **[▼]** buttons for more than 8 seconds. After 8 seconds, LEDs L3 and L4 start flashing very quickly; at this point, release the **[Stop/Set]** and **[▼]** keys.

If the above conditions are not satisfied, immediately switch off the power supply to the control unit and carefully check the electrical connections.

7.8 - Checking gate movement

Upon completion of the gate length recognition, it is advisable to carry out a few manoeuvres in order to verify that the gate moves properly.

01.	Press the **[▲]** key to command an “**Open**” manoeuvre; check that gate opening occurs correctly, without any variations in speed; the gate must only slow down and stop when it is between 70 and 50 cm from the opening limit switch, and stop as a result of the limit switch at 2–3 cm from the mechanical opening stop
02.	Press the **[▼]** key to command a “**Close**” manoeuvre; check that gate opening occurs correctly, without any variations in speed; the gate must only slow down and stop when it is between 70 and 50 cm from the closing limit switch, and stop as a result of the limit switch at 2–3 cm from the mechanical closing stop
03.	During the manoeuvre, check that the flashing light flashes at intervals of 0.5 seconds on and 0.5 seconds off. If present, also check the flashes of the light connected to the OGI terminal: slow flashing during opening, quick flashing during closing.
04.	Open and close the gate several times to make sure that there are no points of excessive friction and that there are no defects in the assembly or adjustments
05.	Check that the ROBUS gearmotor, rack and limit switch brackets are stably and safely secured, and are suitably resistant also during sudden gate acceleration or deceleration movements

7.9 - Pre-set functions

The ROBUS control unit has several programmable functions. These functions are factory-set to a configuration that should satisfy most automations.

The functions can be modified at any time through an appropriate programming procedure; to this aim, refer to Paragraph 7.1 “Programming”.

7.10 - Radio receiver

To remote control ROBUS, an SM connector for SMXI or OXI type optional radio receivers is included on the control unit.

For further information consult the radio receiver instruction manual. To insert the radio receiver, complete the operations indicated in the figure.

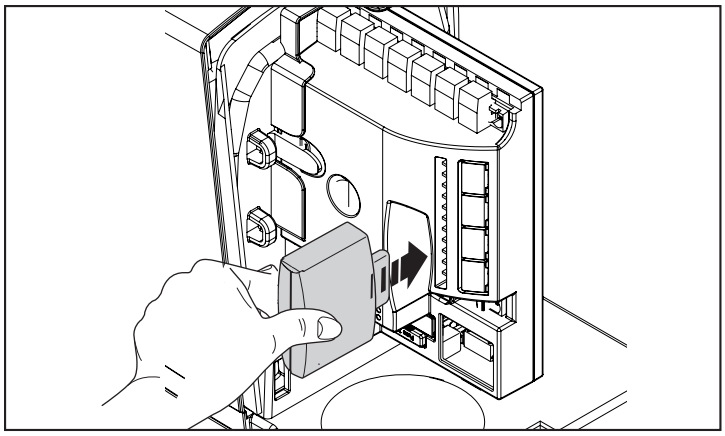

Table 9 describes the association between the radio receiver output and the command that ROBUS will execute:

Table 9

Output	Command
N° 1	Sbs (Step-by-Step)
N° 2	Partial open
N° 3	Open
N° 4	Close

8 FURTHER INFORMATION

8.1 - Adding or removing devices

Devices can be added to or removed from the ROBUS automation at any time. In particular, various types of devices can be connected to “BLUEBUS” and “STOP” input as explained in the following paragraphs.
After adding or removing devices, it is necessary to rerun the device recognition procedure as described in Paragraph 8.4 “Recognition of other devices”.

Bluebus

BLUEBUS is a technique that allows for connecting compatible devices using only two wires that carry both the power supply and the communication signals. All the devices are connected in parallel on the same 2 wires of the BLUEBUS, and without having to observe any polarity; each device is individually recognised because a univocal address is assigned to it during installation. Photocells, safety devices, control keys, signalling lights etc. can be connected to BLUEBUS. The ROBUS control unit recognises all the connected devices individually through a suitable recognition process, and can detect all possible anomalies with absolute precision. For this reason, each time a device connected to BLUEBUS is added or removed, the control unit must go through the recognition procedure as described in Paragraph 8.4 “Recognition of other devices”.

STOP input

STOP is the input that causes the immediate interruption of the manoeuvre (with a short reverse run). Devices with output featuring normally open “NO” contacts and devices with normally closed “NC” contacts, as well as devices with 8.2 kΩ constant resistance output, such as sensitive edges, can be connected to this input.
Similarly to BLUEBUS, the control unit recognises the type of device connected to the STOP input during the recognition phase (see Paragraph 8.4 “Recognition of other devices”); subsequently, a stop is triggered when any variation occurs with respect to the recognised status.
Multiple devices, even of different types, can be connected to the STOP input if suitable arrangements are made:
• Multiple NO devices can be connected to each other in parallel without any quantity limit.
• Multiple NC devices can be connected to each other in series without any quantity limit.
• Two devices with 8.2 kΩ constant resistance output can be connected in parallel; if there are more than 2 devices, all must be connected in cascade, with a single 8.2 kΩ termination resistor.
• NO and NC combinations are possible by placing the 2 contacts in parallel, taking care to place a 8.2 kΩ resistor in series with the NC contact (this allows for combining 3 devices: NO, NC and 8.2 kΩ).

⚠ If the STOP input is used to connect devices with safety functions, only the devices with 8.2 kΩ constant resistance guarantee Category 3 safety against faults in accordance with the EN 954-1 standard.

Photocells
Through addressing using special jumpers, the “BLUEBUS” system enables the control unit to recognise the photocells and assign the correct detection function. The addressing operation must be done both on TX and RX (setting the jumpers in the same way), while making sure there are no other pairs of photocells with the same address. In an automation mechanism for sliding gates with ROBUS, it is possible to install photocells as shown in the figure. Each time a photocell is added or removed, the control unit must go through the recognition process as described in Paragraph 8.4 “Recognition of other devices”.

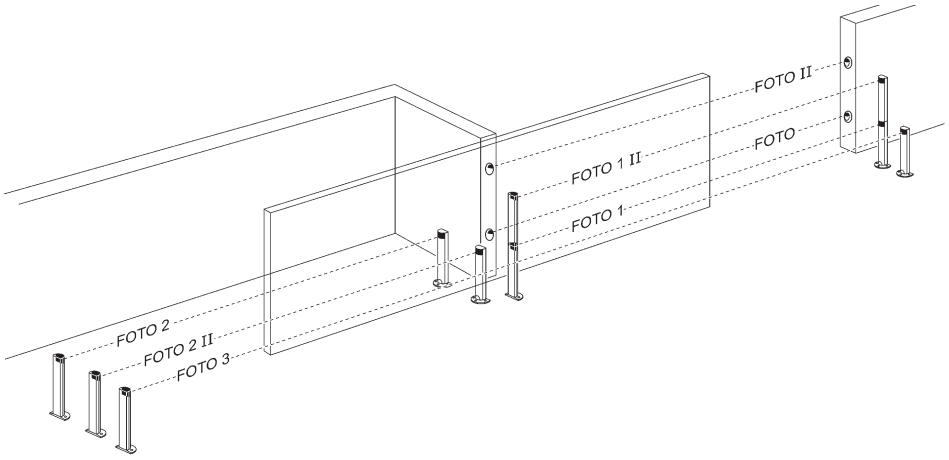

Table 10	
Photocells	**Jumpers**
PHOTO	Photocell h = 50 with activation on closing
PHOTO II	Photocell h = 100 with activation on closing
PHOTO 1	Photocell h = 50 with activation on closing
PHOTO 1 II	Photocell h = 100 with activation on closing
PHOTO 2	External photocell activated when gate opens
PHOTO 2 II	Internal photocell activated when gate opens
PHOTO 3	Single photocell covering the entire automation
⚠ The joint installation of PHOTO 3 and PHOTO II requires that the position of the elements constituting the photocell (TX - RX) complies with the precaution contained in the photocell instruction manual.	

8.2 - FT210B Photosensor

The FT210B photosensor unites in a single device a force limiting device (type C in accordance with the EN12453 standard) and a presence detector which detects the presence of obstacles on an optical axis between the TX transmitter and the RX receiver (type D in accordance with the EN12453 standard). The sensitive edge status signals on the FT210B photosensor are transmitted by means of the photocell beam, integrating the two systems in a single device. The transmitting part is positioned on the mobile leaf and is powered by a battery, thereby eliminating unsightly connection systems; battery consumption is reduced by special circuits to guarantee a duration of up to 15 years (see the estimation details in the product instructions).

Combining a FT210B device with a sensitive edge (TCB65, for example) allows for attaining the level of security of the “main edge” required by the EN12453 standard for all “types of use” and “types of activation”.

Photosensor FT210B combined with “resistive” sensitive edges (8.2 kΩ) is safe against single faults. It is equipped with a special anti-collision circuit to prevent interference with other detectors, even not synchronised, and allows for adding other photocells; for example, in case of transit of heavy vehicles where a second photocell is normally positioned at 1 m from the ground.

See the FT210B instruction manual for further information concerning connection and addressing methods.

8.3 - ROBUS in “Slave” mode

When properly programmed and connected, ROBUS can function in “Slave” mode; this type of function is used when 2 opposing gate leaves must be automated with the synchronised movement of the two gate leaves. In this mode, one ROBUS functions as a Master commanding the movement, while the second ROBUS functions as a Slave, by executing the commands transmitted by the Master (all ROBUS devices are factory-set to operate as Masters).

To configure ROBUS as Slave, one “Slave Mode” Level 1 function must be activated (see Table 5).

01. The connection between ROBUS Master and ROBUS Slave is made via BLUEBUS.

⚠ In this case the polarity of the connections between the two ROBUS devices must be respected, as illustrated in the figure (the other devices continue not having polarity)

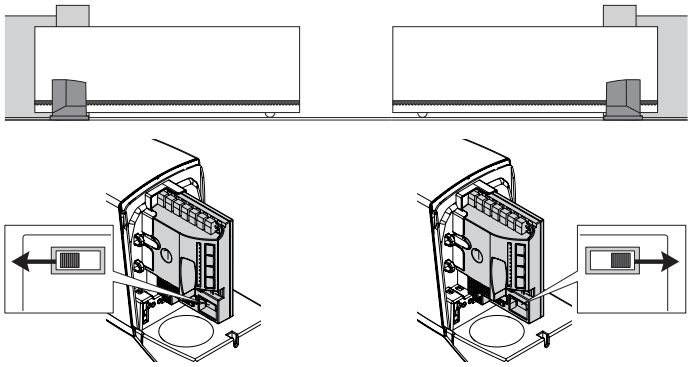

Follow the operations below to install 2 ROBUS devices in Master and Slave mode:

- Install the 2 motors

It is not important which motor must function as Slave or Master; the choice must take into account the convenience of the connections and the fact that the Step-by-Step command of the Slave only allows the Slave leaf to be opened fully

- Connect the 2 motors
- Select the direction of the opening manoeuvre of the 2 motors (Figures 5-6)
- Power the 2 motors
- Programme the “Slave Mode” function on the Slave ROBUS (see Table 5)
- Run the device recognition on the Slave ROBUS (see Paragraph 7.6 “Recognition of devices”)
- Run the device recognition on the Master ROBUS (see Paragraph 7.6 “Recognition of devices”)
- Run the gate leaf length recognition on the Master ROBUS (see Paragraph 7.7 “Gate leaf length recognition”)

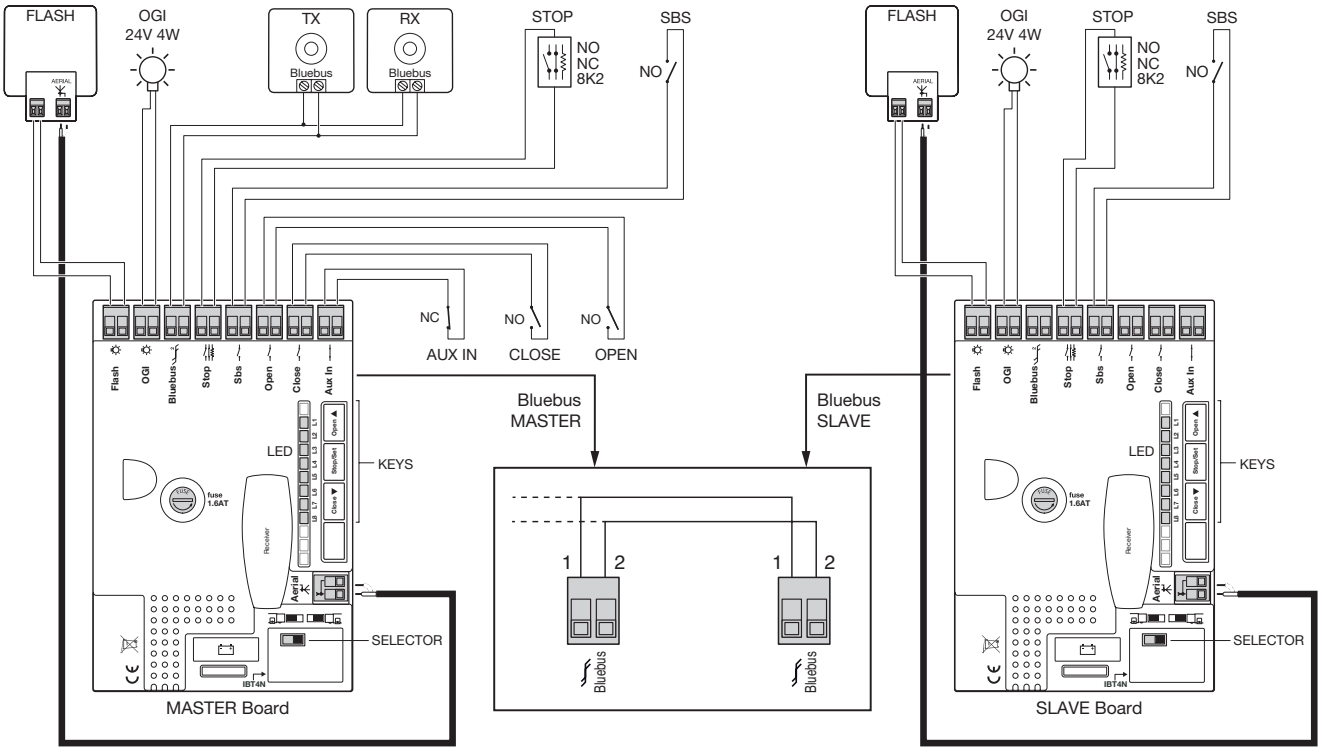

⚠ **When connecting 2 ROBUS devices in Master-Slave mode, make sure that:**

- All devices must be connected to the Master ROBUS, including the radio receiver.

- When using back-up batteries, each motor must have its own battery.

- All programming activities performed on the Slave ROBUS are ignored (those on Master ROBUS override the others) except for those mentioned in Table 11.

Table 11 - Programming on Slave ROBUS independently from the Master ROBUS	
Level 1 functions (ON-OFF functions)	**Level 2 functions (adjustable parameters)**
Stand-by	Motor speed
Peak	OGI output
Slave mode	Motor force
	Error list
On Slave it is possible to connect: • a flashing light (Flash) • a Gate Open Indicator (OGI) • a sensitive edge (Stop) • a command device (Step-by-Step) that controls the full opening of the Slave gate leaf only On the Slave, the Open, Close and Aux_In inputs are not used.	

8.4 - Recognition of other devices

Normally the recognition of devices connected to the BLUEBUS and to the STOP input occurs during the installation phase. However, if new devices are added or old ones removed, the recognition process completed again by proceeding as shown in Table 12.

Table 12 - Recognition of other devices		Example
01.	Press and hold **[▲]** and **[Stop/Set]**	Open and Stop/Set
02.	Release the keys when LEDs L1 and L2 start to flash quickly (after roughly 3 seconds)	Open Stop/Set L1 L2
03.	Wait a few seconds until the control unit has completed the device recognition procedure	
04.	At the end of the recognition process, LEDs L1 and L2 will stop flashing, the STOP LED must stay on, while LEDs L1...L8 will switch on based on the status of the ON-OFF functions they represent	L1 L2
⚠ After having added or removed a device, the automation must be tested again as specified in Paragraph “6.1 Testing”.		

8.5 - Connecting the Oview programmer

The Oview programming unit can be connected to the control unit via the IBT4N interface using a BUS cable with 4 electrical wires inside. This unit allows the functions to be programmed quickly and comprehensively, the parameters to be adjusted, the control unit firmware to be updated, and the diagnostics to be run to detect any malfunctions and routine maintenance.

The Oview unit allows the control unit to be used at a distance of approximately 100 m. If there are multiple control units connected together in a ‘BusT4’ network, by connecting the Oview to one of these control units, all of the control units connected in the network can be viewed on the display (maximum of 16 control units).

The Oview unit can remain connected to the control unit during normal operation of the operator, allowing the user to send commands via a specific menu.

⚠ **WARNING! – Before connecting the IBT4N interface, disconnect the control unit from the mains electrical power supply.**

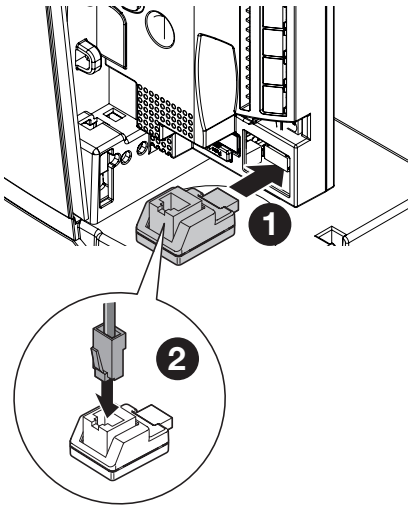

8.6 - Special functions

“Always open” function
The “Always open” function is a control unit feature that enables the user to control an opening manoeuvre when the “Step-by-Step” command lasts longer than 2 seconds. This is useful for connecting a timer contact to the “Step-by-Step” terminal in order to keep the gate open for a certain amount of time, for example. This feature is valid regardless of the “Step-by-Step” input programming, except for “Close” – refer to the “Step-by-Step Function” parameter in Table 7. ⚠ If the STOP input is used to connect devices with safety functions, only devices with 8.2 kΩ constant resistance output guarantee adequate safety against faults.

“Move anyway” function
In the event that one of the safety devices is not functioning properly or is out of order, it is still possible to command and move the gate in “Man present” mode. Please refer to the paragraph “Control with safety devices out of order” in the annex “User manual” for further information.
Maintenance notification
ROBUS allows for notifying the user when the automation requires a maintenance control. The number of manoeuvres after the notification can be selected from among 8 levels, by means of the “Maintenance notification” adjustable parameter (see Table 7). Adjustment level 1 is “automatic” and takes into consideration the severity of the manoeuvre, this being the force and duration of the manoeuvre, while the other adjustments are defined based on the number of manoeuvres. The maintenance request notification is given by means of the “Flash” flashing light or through the lamp connected to the OGI output when programmed as a “Maintenance indicator” (see Table 7). The “Flash” flashing light and the maintenance indicator give the signals indicated in Table 13 based on the number of manoeuvres performed with respect to the programmed limits.

Table 13- Maintenance notice signals

Number of manoeuvres	Signal on “Flash”	Signal on maintenance indicator
Lower than 80% of the limit	Normal (0.5 s on, 0.5 s off)	On for 2 s at the start of opening
Between 81% and 100% of the limit	At the start of the manoeuvre, it remains lit for 2 s then continues normally	Flashes throughout the manoeuvre
Over 100% of the limit	At the start and end of the manoeuvre, remains lit for 2 s then continues normally	Flashes always

Check of the number of manoeuvres performed

The number of manoeuvres performed as a percentage of the set limit can be verified by means of the “Maintenance notification” function. For the check proceed as described in Table 14.

Table 14 - Check of the number of manoeuvres performed		Example
01.	Press and hold the **[Stop/Set]** key for roughly 3 seconds	Stop/Set 3s
02.	Release the **[Stop/Set]** key when LED L1 starts flashing	L1 Stop/Set
03.	Press and release the **[▲]** or **[▼]** keys to shift LED flashing on L7, namely the “input LED” associated with the “Maintenance notification” parameter	Open or Close L7
04.	Press and hold the **[Stop/Set]** key, which must be kept pressed throughout all steps 5, 6 and 7	Stop/Set
05.	Wait approx. 3 seconds after which the LED associated with the current level of the “Maintenance notification” parameter will light up	3s
06.	Press and release **[▲]** and **[▼]**	Open and Close
07.	The LED corresponding to the selected level flashes a few times. The number of flashes indicates the percentage of manoeuvres performed (in multiples of 10%) with respect to the set limit. For example: with the maintenance notification set to L6 namely 10000, 10% corresponds to 1000 manoeuvres; if the visualisation LED flashes 4 times, it means that 40% of the manoeuvres has been reached (being between 4000 and 4999 manoeuvres). If 10% of the manoeuvres has not yet been reached, the LED does not flash at all	... **n=?**
08.	Release **[Stop/Set]**	Stop/Set

Manoeuvre counter resetting

After maintenance has been performed on the system, the manoeuvre counter must be reset.
Proceed as described in Table 15.

Table 15 - Manoeuvre counter resetting		Example
01.	Press and hold the **[Stop/Set]** key for roughly 3 seconds	Stop/Set 3s
02.	Release the **[Stop/Set]** key when LED L1 starts flashing	L1 Stop/Set
03.	Press and release the **[▲]** or **[▼]** keys to shift LED flashing on L7, namely the “input LED” associated with the “Maintenance notification” parameter	Open or Close L7

04.	Press and hold the **[Stop/Set]** key, which must be kept pressed throughout all steps 5, 6 and 7	
05.	Wait approx. 3 seconds after which the LED associated with the current level of the “Maintenance notification” parameter will light up	3s
06.	Press and hold buttons **[▲]** and **[▼]** for at least 5 seconds, then release the 2 buttons. The LED that corresponds to the selected level flashes rapidly indicating that the manoeuvre counter has been reset	and 5s
07.	Release **[Stop/Set]**	

8.7 - Connecting other devices

If the user needs to power external devices, such as a proximity reader for transponder cards or the illumination light of the key-operated selector switch, it is possible to tap power as shown in the figure.

The power supply voltage is 24V⎓ (-30% +50%) with a maximum available current of 100 mA.

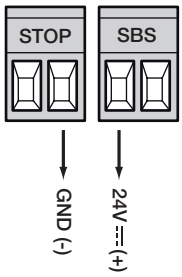

8.8 - Accessories

The following optional accessories are available for ROBUS:

- SMXI or OXI Radio receiver at 433.92 MHz with Rolling Code digital coding
- PS124 24 V - 1.2 Ah back-up battery with integrated battery charger
- SOLEMYO solar power system (for installation and connection refer to the product’s instruction manual)

SMXI o OXI

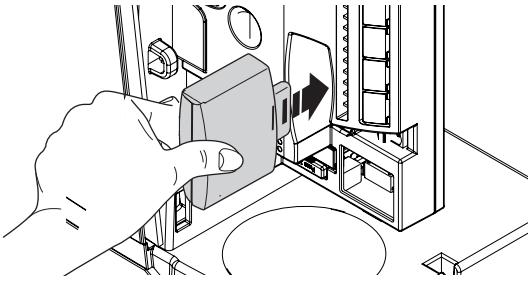

PS124

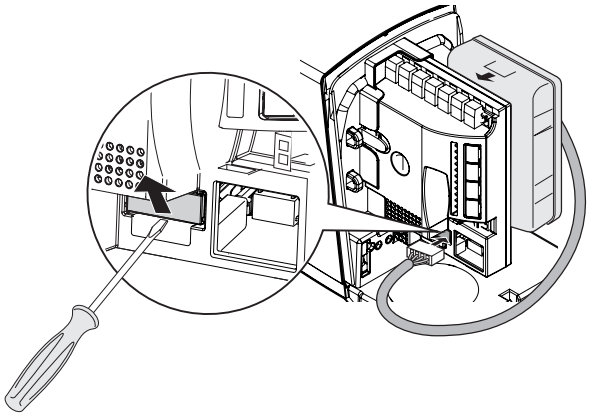

9 DIAGNOSTICS

In case of malfunction due to problems during installation or a fault, refer to Table 16:

Table 16

Problem	Solution
The radio transmitter does not control the gate and the LED on the transmitter does not light up	Check whether the transmitter batteries are exhausted and replace them if necessary
The radio transmitter does not control the gate but the LED on the transmitter lights up	Check whether the transmitter has been memorised correctly in the radio receiver Check that ROBUS is powered with the mains voltage
No manoeuvre starts and the “BLUEBUS” LED does not flash	Check that the fuses are not blown; if they are, identify the reason for the failure and replace them with others having the same current rating and characteristics Check that the command is actually received. If the command reaches the Step-by-Step input, the corresponding “Step-by-Step” LED must light up; if instead the radio transmitter is used, the “BlueBus” LED must make two quick flashes
No manoeuvre starts and the flashing light is off	Check that the command is actually received. If the command reaches the Step-by-Step input, the corresponding “Step-by-Step” LED must light up; if instead the radio transmitter is used, the “BlueBus” LED must make two quick flashes

YAYDOOR www.yaydoor.com

No manoeuvre starts and the flashing light flashes a few times	Count the flashes and check the corresponding value in Table 18
The manoeuvre starts but is immediately followed by a reverse run	The selected force could be too low for this type of gate. Check whether there are any obstacles and increase the force if necessary
The manoeuvre is carried out but the flashing light does not work	Make sure that there is voltage on the flashing light's FLASH terminal during the manoeuvre (being intermittent, the voltage value is not important: approximately 10-30 VDC); if there is voltage, the problem is due to the lamp; in this case replace the lamp with one having the same characteristics; if there is no voltage, there may have been an overload on the FLASH output. Check that the cable has not short-circuited
The manoeuvre is carried out but the Gate Open Indicator (OGI) does not work	Check the type of function programmed for the OGI output (Table 7) When the indicator light should be on, check that there is voltage on the OGI terminal (approximately 24V). If there is voltage, the problem is due to the indicator light, which will have to be replaced with one having the same characteristics. If there is no voltage, there may have been an overload on the OGI output. Check that the cable has not short-circuited

9.1 - Fault log list

ROBUS can display any faults that have occurred in the last 8 manoeuvres, for example interruption of a manoeuvre due to activation of a photocell or sensitive edge. To check the list of faults proceed as shown in Table 17.

Table 17 - Fault log		Example
01.	Press and hold the **[Stop/Set]** key for roughly 3 seconds	Stop/Set 3s
02.	Release the **[Stop/Set]** key when LED L1 starts flashing	L1 Stop/Set
03.	Press and release the **[▲]** or **[▼]** keys to shift LED flashing on L8, namely the "input LED" associated with the "Fault log" parameter	Open or Close L8
04.	Press and hold the **[Stop/Set]** key, which must be kept pressed throughout all steps 5 and 6	Open
05.	Wait approx. 3 seconds after which the LEDs corresponding to the faulty manoeuvres will light up. LED L1 indicates the result of the last manoeuvre and LED L8 indicates the result of the 8th manoeuvre. If the LED is on, this means that faults occurred during the manoeuvre; if the LED is off, this means that no fault occurred during the manoeuvre	3s
06.	Press and release the **[▲]** and **[▼]** keys to select the desired manoeuvre: The corresponding LED emits a number of flashes equal to those normally emitted by the flashing light after a fault (see Table 18)	Open and Close
07.	Release **[Stop/Set]**	Stop/Set

9.2 - Diagnostics and signals

Certain devices directly provide special signals that help to describe the operating status or any malfunction.

9.2.1 - Flashing light signals

During the manoeuvre the FLASH flashing light flashes once every second. When a fault occurs, the flashes become more frequent; the light flashes twice with a one-second pause between flashes.

Table 18

Signal	Cause	Solution
1 flash 1-sec pause 1 flash	Bluebus system error	At the start of the manoeuvre, the devices connected to BLUEBUS do not correspond to those memorised during the recognition phase. One or more devices may be faulty; check and, if necessary, replace them; in case of modifications the recognition process must be repeated
2 flashes 1-sec pause 2 flashes	Intervention of a photocell	At the start of the manoeuvre, one or more photocells prevent movement; verify whether there are any obstacles. This is normal when there is an obstacle hampering the gate's movement
3 flashes 1-sec pause 3 flashes	Activation of the "Motor Force" limiting device	During the movement, the gate experienced excessive friction; identify the cause
4 flashes 1-sec pause 4 flashes	Intervention of the STOP input	At the start of the manoeuvre or during the movement, the STOP input intervened; identify the cause

5 flashes 1-sec pause 5 flashes	Error in the internal parameters of the control unit	Wait at least 30 seconds then try giving a command; if the condition persists it means there is a serious malfunction and the electronic board must be replaced
6 flashes 1-sec pause 6 flashes	The maximum manoeuvre limit/ hour has been exceeded	Wait a few minutes until the manoeuvre limiting device drops below the maximum limit
7 flashes 1-sec pause 7 flashes	Error in the internal electric circuits	Disconnect all power circuits for a few seconds then try to give a command again. If the condition persists it means there is a serious malfunction and the electronic board must be replaced
8 flashes 1-sec pause 8 flashes	A command that does not allow other commands to be executed is already present	Check the type of command that is always present; for example, it could be a command from a timer on the “open” input
9 flashes 1 second pause 9 flashes	The operator has been blocked by a “block operator” command	Release the operator by sending a “release operator” command.

9.2.2 - Control unit signals

The ROBUS unit has a series of LEDs, each of which can emit special signals both during regular operation and when a fault occurs.

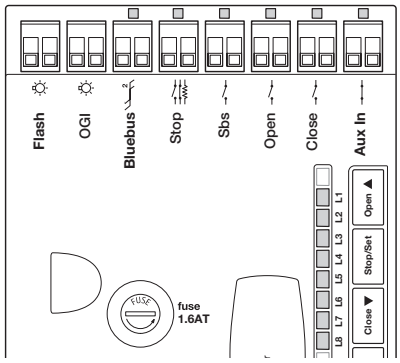

Table 19 - LED’s on the control unit’s terminals		
BLUEBUS LED	**Cause**	**Action**
Off	Fault	Make sure there is power supply; check to see if the fuses are blown; if necessary, identify the reason for the failure then replace them with others of the same type
On	Serious fault	There is a serious fault; try switching off the control unit for a few seconds; if the condition persists, it means there is a malfunction and the circuit board has to be replaced
1 flash per second	All OK	Control unit works correctly
2 quick flashes	Input status variation	This is normal when there is a change in one of the inputs: OPEN, STOP, triggering of photocells or the radio transmitter is used
Series of flashes separated by a one-second pause	Various	This is the same signal that appears on the flashing light. See Table 18
STOP LED	**Cause**	**Action**
Off	Intervention of the STOP input	Check the devices connected to the STOP input
On	All OK	STOP input active
Sbs LED	**Cause**	**Action**
Off	All OK	Sbs input not active
On	Intervention of the Sbs input	Normal if the device connected to the Sbs input is active
OPEN LED	**Cause**	**Action**
Off	All OK	OPEN input not active
On	Intervention of the OPEN input	Normal if the device connected to the OPEN input is active
CLOSE LED	**Cause**	**Action**
Off	All OK	CLOSE input not active
On	Intervention of the CLOSE input	Normal if the device connected to the CLOSE input is active
AUX_IN LED	**Causa**	**Azione**
Off	AUX_IN input contact open	Check the devices connected to the AUX_IN input
On	All OK	AUX_IN input active

Table 20 - LED's on the control unit keys	
L1 LED	**Description**
Off	During normal operation it signals that the "Automatic closing" mode is not active
On	During normal operation it signals that the "Automatic closing" mode is active
Flashes	• Function programming in progress • If it flashes together with L2, it means that the device recognition phase must be carried out (Paragraph 7.6)
L2 LED	**Description**
Off	During normal operation it signals that the "Close after photo" mode is not active
On	During normal operation it signals that the "Close after photo" mode is active
Flashes	• Function programming in progress • If it flashes together with L1, it means that the device recognition phase must be carried out (Paragraph 7.6)
L3 LED	**Description**
Off	During normal operation it signals that the "Always close" mode is not active
On	During normal operation it signals that the "Always close" mode is active
Flashes	• Function programming in progress • If it flashes together with LED L4, the gate leaf length recognition phase must be carried out (Paragraph 7.7)
LED L4	**Description**
Off	During normal operation it signals that the "Standby" mode is not active
On	During normal operation it signals that the "Standby" mode is active
Flashes	• Function programming in progress • If it flashes together with LED L3, the gate leaf length recognition phase must be carried out (Paragraph 7.7)
LED L5	**Description**
Off	During normal operation it indicates that the "Peak" mode is not active
On	During normal operation it signals that the "Thrust" mode is active
Flashes	Function programming in progress
LED L6	**Description**
Off	During normal operation it signals that the "Pre-flashing" mode is not active
On	During normal operation it signals that the "Pre-flashing" mode is active
Flashes	Function programming in progress
LED L7	**Description**
Off	During normal operation it signals that the "CLOSE" input activates a closing manoeuvre
On	During normal operation it signals that the "CLOSE" input activates a partial opening manoeuvre
Flashes	Function programming in progress
LED L8	**Description**
Off	During normal operation it signals that ROBUS is configured as Master
On	During normal operation it signals that ROBUS is configured as Slave
Flashes	Function programming in progress

10 PRODUCT DISPOSAL

This product constitutes an integral part of the automation and, therefore, must be disposed of together with it.
Similarly to the installation phase, once the product reaches the end of its useful life, the disassembly and scrapping operations must be performed by qualified personnel.
This product is made of various types of materials, some of which can be recycled while others must be scrapped. Seek information on the recycling and disposal systems envisaged by local regulations in your area for this product category.

⚠ CAUTION! - Some parts of the product may contain polluting or hazardous substances which, if released into the environment, constitute serious environmental and health risks.

As indicated by the adjacent symbol, the product may not be disposed of together with domestic waste. Sort the materials for disposal, according to the methods envisaged by current legislation in your area, or return the product to the retailer when purchasing an equivalent product.

⚠ CAUTION! - Local legislation may include the application of heavy fines in the event of improper disposal of this product.

11 MAINTENANCE

To ensure constant safety levels a long service life, the system must be serviced regularly: at least every 6 months or after maximum 20,000 movements since the last service. ROBUS is equipped with a manoeuvre counter and a maintenance notification system; see Paragraph 8.5 “Maintenance notification”.

⚠ CAUTION! – The maintenance operations must be performed in strict compliance with the safety directions provided in this manual and according to applicable legislation and standards.

01.	OFF	Check the state of deterioration of all materials constituting the automation: pay special attention to erosion and oxidation of structural components. Replace any parts that are not to standard
02.	Check the state of wear of moving parts: pinion, rack and all parts of the gate leaf; replace any worn components if necessary	
03.	ON	Run all the tests and checks indicated in Paragraph 6.1 - Testing

12 TECHNICAL SPECIFICATIONS

⚠ All technical specifications stated herein refer to an ambient temperature of 20°C (± 5°C). • Nice S.p.A. reserves the right to modify its products at any time when deemed necessary, while nonetheless maintaining their intended use and functionality.

	RB600 / RB600P	RB1000 / RB1000P	RB500HS	RB500HS/V1
Product type	Electromechanical gearmotor for the automatic movement of sliding gates for residential use, inclusive of electronic control unit			
Pinion	Z15m4	Z15m4	Z18m4	Z18m4
Maximum frequency of operating cycles (at nominal torque)	100 cycles / day (the control unit limits the cycles to the maximum value specified in Table 2)	150 cycles / day (the control unit limits the cycles to the maximum value specified in Table 2)	100 cycles / day (the control unit limits the cycles to the maximum value specified in Table 2)	100 cycles / day (the control unit limits the cycles to the maximum value specified in Table 2)
Maximum continuous operating time (at nominal torque)	7 minutes (the control unit limits continuous operation to the maximum value specified in Table 2)	5 minutes (the control unit limits continuous operation to the maximum value specified in Table 2)	6 minutes (the control unit limits continuous operation to the maximum value specified in Table 2)	6 minutes (the control unit limits continuous operation to the maximum value specified in Table 2)
Application limits	ROBUS is generally able to automate gates up to the weight and length limits specified in Table 1			
Durability	Estimated between 20,000 and 250,000 cycles, depending on the conditions given in Table 2			
Power supply Version V1	230V~ (+10% -15%) 50/60Hz 120V~ 50/60Hz	230V~ (+10% -15%) 50/60Hz 120V~ 50/60Hz	230V~ (+10% -15%) 50/60Hz	120V~ 50/60 Hz
Maximum power input at peak [corresponding to amperes]	515W [2,5A] [4,8A versione /V1]	450W [2,3A] [4,4A versione /V1]	460W [2,5A]	460W [4,8A]
Insulation class	1 (a safety earthing system is required)			
Emergency power supply	With PS124 optional accessory			
Flashing light output	For 2 flashing ELDC LED lights or max. 2 x 12V 21W bulbs			
Gate Open Indicator (OGI) output	For one 24 V maximum 4 W lamp (the output voltage may vary between –30 and +50% and can also control small relays)			
BLUEBUS output	One output with maximum load of 15 BLUEBUS units			
STOP input	For normally closed or normally open contacts or for 8.2 kΩ constant resistance with self-recognition (any variation from the memorised status triggers the “STOP” command)			
Step-by-step input	For normally open contacts (contact closure triggers a step-by-step command)			
OPEN input	For normally open contacts (closing of the contact triggers the OPEN command)			
CLOSE input	For normally open contacts (closing of the contact triggers the CLOSE command)			
AUX_IN input	For normally closed contacts (contact opening triggers an ALT command)			
Radio connector	SM connector for SMXI and OXI receivers			
Radio ANTENNA Input	52 Ω for RG58 or similar type cable			
Programmable functions	8 ON-OFF functions and 8 adjustable functions (see Tables 5 and 7)			
Self-recognition functions	Automatic recognition of devices connected to the BLUEBUS output Self-recognition of the type of “STOP” device (Normally Open, Normally Closed contact or 8.2 kΩ resistor) Self-recognition of the gate length and calculation of the deceleration points and partial opening points			

YAYDOOR www.yaydoor.com

EU Declaration of Conformity
and declaration of incorporation of “partly completed machinery”

Note: the contents of this declaration correspond to that stated in the official document filed in the offices of Nice S.p.A. and, in particular, the latest version thereof available prior to the printing of this manual. The text herein has been re-edited for editorial purposes. A copy of the original declaration can be requested from Nice S.p.A. (TV) Italy.

Declaration number: **210/ROBUS** Revision: **16** Language: **EN**

Manufacturer’s name: NICE S.p.A.
Address: Via Callalta n°1, 31046 Rustignè di Oderzo (TV) Italy
Person authorised to compile the technical documentation: NICE S.p.A.
Product type: Electromechanical gear motor with incorporated control unit
Model / Type: RB600/A, RB600P/A, RB600P, RB600, RB600S, RB500HS, RB1000P, RB1000, RB1000/A, RB1000P/A, RB500HS
Accessories: Refer to the catalog.

The undersigned Roberto Griffa, in the role of Chief Executive Officer, declares under his sole responsibility that the product described above complies with the provisions laid down in the following directives:

• Directive 2014/30/EU (EMC), in accordance with the following harmonised standards:
EN 61000-6-2:2005, EN 61000-6-3:2007+A1:2011

The product also complies with the following directives according to the requirements envisaged for “partly completed machinery” (Annex II, part 1, section B):
Directive 2006/42/EC of the EUROPEAN PARLIAMENT AND COUNCIL of 17 May 2006 related to machinery and amending the Directive 95/16/EC (recast).
– It is hereby stated that the relevant technical documentation has been compiled in accordance with annex VII B of Directive 2006/42/EC and that the following essential requirements have been fulfilled: 1.1.1 1.1.2 1.1.3-1.2.1-1.2.6-1.5.1-1.5.2-1.5.5-1.5.6-1.5.7-1.5.8-1.5.10-1.5.11
– The manufacturer undertakes to transmit to the national authorities, in response to a reasoned request, the relevant information on the “ partly completed machinery “, while maintaining full rights to the related intellectual property.
– Should the “ partly completed machinery” be put into service in a European country with an official language other than that used in this declaration, the importer is obliged to arrange for the relative translation to accompany this declaration.
– The “partly completed machinery” must not be used until the final machine in which it is incorporated is in turn declared as compliant, if applicable, with the provisions of directive 2006/42/EC.

The product also complies with the following standards:
EN 60335-1:2012+A11:2014, EN 60335-2-103:2015, EN 62233:2008.

Oderzo, 16/05/2018

Ing. **Roberto Griffa**
(Chief Executive Officer)

YAYDOOR www.yaydoor.com

User manual
(to be handed to the end user)

- When the automation is used for the first time, the installation technician must inform the user about the origin of the residual risks and the user must take some time to read this user manual.
- It is important to store this user manual (delivered by the installation technician) for future reference and hand it over to the new owner when the automation is transferred.
- Your automation system is a machine that will faithfully execute your commands; unreasonable or improper use may make it dangerous: do not operate the system if there are people, animals or objects within its range of operation.
- **Children:** automation systems are designed to guarantee high levels of safety and security. They are equipped with detection devices that prevent movement if people or objects are in the way, guaranteeing safe and reliable activation. However, it is advisable to avoid letting children play in the vicinity of the automation and remote controls should always be kept out of their reach – it is not a toy!
- **Checking the system:** in particular all cables, springs and supports, to detect possible imbalances, and signs of wear or damage.

  – Check that the system is safe on a monthly basis using safety equipment with sensitive edges.
  – Do not use the automation if repairs or adjustments are required; any fault or an incorrectly balanced gate may lead to physical injury.
- **Faults:** if the automation is malfunctioning, shut off its power supply. Never attempt any repairs; contact your local installer for assistance.

  – The system can be operated manually: release the gearmotor as described in “Manuallly releasing the gearmotor” section.
  – Do not modify the system or its programming and adjustment parameters in any way: your installer is exclusively responsible for these operations.
  – The final test, periodic maintenance and any repairs must be documented by the person who performed them, and the relative documents must be stored by the owner of the system.

  Important: have the system repaired as soon as possible if the safety devices are malfunctioning. “Transit is allowed only if the gate is completely open and stationary”.
- **Disposal:** At the end of the automation’s life, ensure that it is disposed by qualified personnel and that the materials are recycled or scrapped according to current local regulations for this product category.
- **Maintenance**: as with all machinery, this automation requires periodic maintenance to ensure optimal operation, extended lifetime and complete safety. Arrange a periodic maintenance schedule with your installation technician. Nice recommends that maintenance checks be carried out every six months for normal domestic use, but this interval may very depending on the intensity of use. Only qualified personnel is authorised to carry out checks, maintenance operations and repairs.
- **Manually releasing the gearmotor**

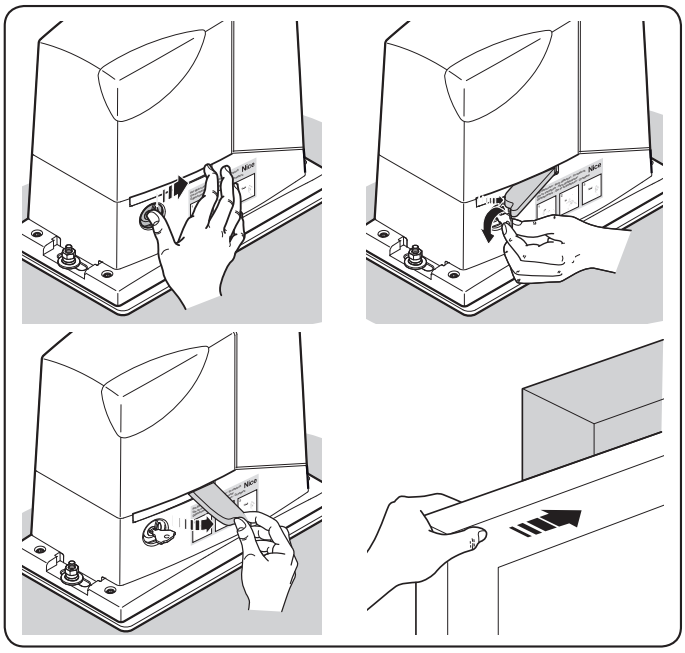

-

- **Manually locking the gearmotor**

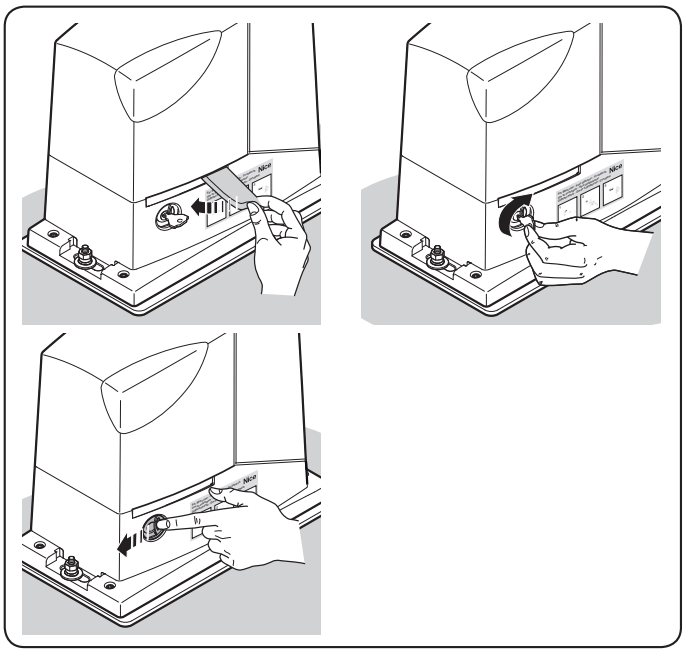

YAYDOOR www.yaydoor.com

IDV0620A01EN_31-01-2019

Nice

Nice SpA
Via Callalta, 1
31046 Oderzo TV Italy
info@niceforyou.com

www.niceforyou.com