Nice

SLH400

Sliding gate opener

EN - Instructions and warnings for installation and use

Nice

ENGLISH

Translation of the original instructions in full

CONTENTS

1 GENERAL SAFETY WARNINGS AND PRECAUTIONS 2
1.1 General warnings 2
1.2 Installation warnings 3
2 PRODUCT DESCRIPTION AND INTENDED USE 3
2.1 List of constituent parts 3
3 INSTALLATION 4
3.1 Pre-installation checks 4
3.2 Product usage limits 4
3.2.1 Product durability 5
3.3 Product identification and overall dimensions 5
3.4 Pre-installation works 6
3.5 Installing the gearmotor 7
3.6 Adjusting the mechanical limit switches 9
3.7 Manually unlocking and locking the gearmotor 9
4 ELECTRICAL CONNECTIONS 9
4.1 Preliminary checks 9
4.2 Wiring diagram and description of connections 10
4.2.1 Wiring diagram 10
4.2.2 Description of connections 10
5 FINAL CHECKS AND START-UP 11
5.1 Choosing the direction 11
5.2 Power supply connection 11
5.3 Device learning 11
5.4 Leaf length learning 11
5.5 Checking the gate movement 13
5.6 Connecting other devices 13
6 TESTING AND COMMISSIONING 13
6.1 Testing 13
6.2 Commissioning 13
7 PROGRAMMING 14
7.1 Using the programming buttons 14
7.2 Level 1 programming (ON-OFF) 15
7.2.1 Level 1 programming procedure 15
7.3 Level 2 programming (adjustable parameters) 16
7.3.1 Level 2 programming procedure 16
7.4 Special functions 17
7.4.1 “Always open” function 17
7.4.2 “Move anyway” function 17
7.4.3 “Maintenance notice” function 18
7.4.4 Verifying the number of manoeuvres completed 18
7.4.5 Manoeuvre counter resetting 18
8 TROUBLESHOOTING GUIDE 19
8.1 Troubleshooting 19
8.2 Anomaly log 19
8.3 Signalling through warning light 20
8.4 Signals on the control unit 20
9 FURTHER DETAILS (Accessories) 22
9.1 Adding or removing devices 22
9.1.1 BlueBUS 22
9.1.2 STOP input 22
9.1.3 Photocells 22
9.1.4 FT210B photosensor 23
9.1.5 Gearmotor in SLAVE mode 23
9.1.6 Learning of other devices 24
9.1.7 Connecting an SM-type radio receiver 24
9.1.8 Connecting and installing the back-up battery 25
9.1.9 Connecting the Oview programmer 26
9.1.10 Connecting the Solemyo solar energy system 26
10 PRODUCT MAINTENANCE 27
11 PRODUCT DISPOSAL 27
12 TECHNICAL SPECIFICATIONS 28
13 CONFORMITY 29
INSTRUCTIONS AND WARNINGS FOR THE USER 31

1 GENERAL SAFETY WARNINGS AND PRECAUTIONS

1.1 GENERAL WARNINGS

WARNING! Important safety instructions. Observe all the instructions, as improper installation may cause serious damages.

WARNING! Important safety instructions. It is important to comply with these instructions to ensure personal safety. Store these instructions with care.

According to the latest European legislation, an automated device must be constructed in conformity to the harmonised rules specified in the current Machinery Directive, which allow for declaring the presumed conformity of the automation. Consequently, all the operations for connecting the product to the mains electricity, its commissioning and maintenance must be carried out exclusively by a qualified and expert technician.

In order to avoid any danger from inadvertent resetting of the thermal cut-off device, this appliance must not be powered through an external switching device, such as a timer, or connected to a supply that is regularly powered or switched off by the circuit.

WARNING! Please abide by the following warnings:

- Before commencing the installation, check the “Product technical specifications”, in particular whether this product is suitable for automating your guided part. Should it not be suitable, do NOT proceed with the installation.
- The product cannot be used before it has been commissioned as specified in the “Testing and commissioning” chapter.
- Before proceeding with the product’s installation, check that all the materials are in good working order and suited to the intended applications.
- The product is not intended for use by persons (including children) with reduced physical, sensory or mental capacities, nor by anyone lacking sufficient experience or familiarity with the product.
- Children must not play with the appliance.
- Do not allow children to play with the product’s control devices. Keep the remote controls out of reach of children.
- The system’s power supply network must include a disconnection device (not supplied) with a contact opening gap permitting complete disconnection under the conditions envisaged by Overvoltage Category III.
- During the installation process, handle the product with care by avoiding crushing, impacts, falls or contact with liquids of any kind. Do not place the product near sources of heat nor expose it to open flames. All these actions can damage the product and cause it to malfunction, or lead to dangerous situations. Should this occur, immediately suspend the installation process and contact the Technical Assistance Service.

- The manufacturer declines all liability for damages to property, objects or people resulting from failure to observe the assembly instructions. In such cases, the warranty for material defects shall not apply.
- The weighted sound pressure level of the emission A is lower than 70 dB(A).
- Cleaning and maintenance reserved for the user must not be carried out by unsupervised children.
- Before working on the system (maintenance, cleaning), always disconnect the product from the mains power supply.
- Inspect the system frequently, in particular the cables, springs and supports to detect any imbalances and signs of wear or damage. Do not use the product if it needs to be repaired or adjusted, because defective installation or incorrect balancing of the automation can lead to injuries.
- The packing materials of the product must be disposed of in compliance with local regulations.
- Keep persons away from the gate when it is manoeuvred using the control elements.
- When operating the gate, keep an eye on the automated mechanism and keep all bystanders at a safe distance until the movement has been completed.
- Do not operate the product if anyone is working nearby; disconnect its power supply before permitting such work to be done.
- If the power cable is damaged, it must be replaced by the manufacturer or by an appointed servicing company or similarly qualified person in order to prevent any form of risk.

1.2 INSTALLATION WARNINGS

- Prior to installing the drive motor, check that all mechanical components are in good working order and properly balanced, and that the automation can be manoeuvred correctly.
- If the gate being automated has a pedestrian gate, the system must be equipped with a control device that inhibits the motor's operation when the pedestrian gate is open.
- Make sure that the control elements are kept far from moving parts but nonetheless directly within sight. Unless a selector is used, the control elements must be installed at least 1.5 m above the ground and must not be accessible.
- If the opening movement is controlled by a fire-sensing system, make sure that any windows larger than 200 mm are closed using the control elements.
- Prevent and avoid any form of entrapment between the moving and fixed parts during the manoeuvres.
- Permanently affix the label concerning the manual manoeuvre near its actuating element.
- After installing the drive motor, make sure that the mechanism, protective system and all manual manoeuvres function properly.

2 PRODUCT DESCRIPTION AND INTENDED USE

SLH400 is a gearmotor designed for automating residential sliding gates.
The product incorporates an electronic control unit with a pin connector. The electrical connections with external devices are simplified thanks to use of the "BlueBUS", a technique that allows for connecting multiple devices with only 2 wires.

If powered from the mains, **SLH400** can house a back-up battery (model PS124, optional accessory) which, in case of a power outage (blackout), guarantees that the automation can complete a few manoeuvres.In the event of power outage, it is still possible to move the gate leaf by unlocking the gearmotor with the appropriate key (see the "***Manually unlocking and locking the gearmotor***" paragraph).

The automation allows for installing various accessories to increase its functions and improve safety.

Any use of the product other than the intended use described is not allowed!

2.1 LIST OF CONSTITUENT PARTS

SLH400 combines an electronic control unit with a pin connector. "***Figure 1***" shows the main parts making up the product.

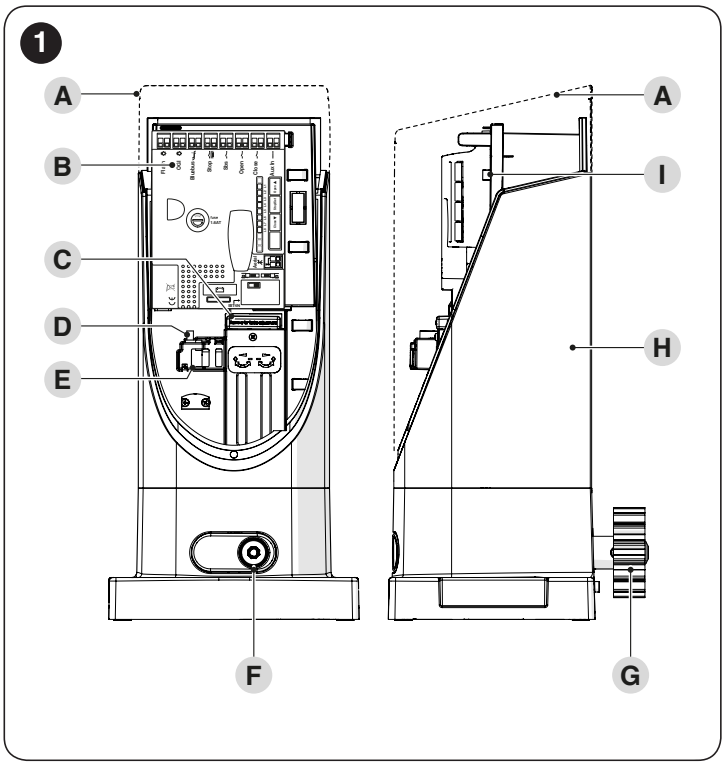

A Top cover
B Electronic control and command unit
C Limit switch position regulators
D Fuse
E Power supply connector
F Lock for the unlocking key
G Pinion
H Side cover
I Cable pass-through rings

3 INSTALLATION

3.1 PRE-INSTALLATION CHECKS

The installation must be carried out by qualified personnel in compliance with the current legislation, standards and regulations, and with the instructions provided in this manual.

Before proceeding with the product's installation, it is necessary to:
- check the integrity of the supply
- check that all the materials are in good working order and suited to the intended use
- make sure that the structure of the gate is suitable for being automated
- make sure that the weight and dimensions of the gate leaf fall within the operating limits specified in the "***Product usage limits***" paragraph
- check that the force required to start moving the gate leaf is less than half the "maximum torque", and that the force required to keep the gate leaf moving is less than half the "nominal torque"; compare the resulting values with those specified in the "***TECHNICAL SPECIFICATIONS***" chapter. The manufacturer recommends a 50% margin on the force, as unfavourable climatic conditions may cause increased friction.
- verify that there are no points of greater friction during the opening and closing movements along the entire gate path
- verify that there is no risk of derailment of the leaf or that it may come off the guides
- verify that the overrun mechanical stops are sturdy enough and that they do not deform even if the leaf should strike them forcefully
- verify that the gate leaf is well balanced: it must not move by itself when left in any position
- make sure that the installation area is not subject to flooding; if necessary, the product must be installed appropriately raised above ground level
- verify that the area where the gearmotor is installed allows for unlocking the latter and manoeuvring easily and safely
- verify that the mounting positions of the various devices are protected against impacts and that the mounting surfaces are sufficiently sturdy
- prevent any parts of the automation from being immersed in water or other liquids
- keep the product away from heat sources and open flames and acid, saline or potentially explosive atmospheres; these may damage the product and cause malfunctions or dangerous situations
- if there is an access door in the gate, or within its range of movement, make sure that it does not obstruct the gate's normal path; install an appropriate interlock system if necessary
- connect the control unit to an electricity supply line equipped with a safety earthing system
- connect the gate to the earthing device in accordance with the current legislation
- include a device on the electric power line ensuring complete disconnection of the automation from the grid. The disconnection device must have contacts with a sufficient gap to ensure complete disconnection, under the Category III overvoltage conditions, in accordance with the installation instructions. Should it be necessary, this device guarantees fast and safe disconnection from the power supply; it must therefore be positioned in view of the automation. If placed in a non-visible location, it must have a system that blocks any accidental on unauthorised reconnection of the power supply, in order to prevent dangerous situations. The disconnection device is not supplied with the product.

3.2 PRODUCT USAGE LIMITS

The data relative to the product's performances is included in the "***TECHNICAL SPECIFICATIONS***" chapter and is the only data that allows for properly assessing whether the product is suitable for its intended use.
The structural characteristics of the product make it suitable for use on sliding gates, according to the limits indicated in the following tables.
The actual suitability of the product to automate a specific sliding gate depends on friction and on other factors, even occasional, such as the presence of frost, which may interfere with the gate leaf's movement.
For an effective check, it is essential to measure the force necessary to move the gate leaf along its entire path and ensure that this is less than half of the "nominal torque" indicated in "***TECHNICAL SPECIFICATIONS***" chapter (a 50% margin on the force is recommended, as unfavourable climatic conditions may cause increased friction); furthermore, it is necessary to take into account that shown in the following tables to define the number of cycles/hour, the consecutive cycles and maximum speed allowed.

Table 1

SLH400 - LIMITS IN RELATION TO THE GATE LEAF LENGTH	
Gate leaf length (m)	**Maximum no. of cycles/hour Maximum no. of consecutive cycles**
Up to 4	35 14
4 ÷ 6	23 11

Table 2

SLH400 - LIMITS IN RELATION TO THE GATE LEAF WEIGHT	
Gate leaf weight (kg)	**Percentage of cycles Maximum speed allowed**
Up to 200	100% V6 = Extremely fast
200 ÷ 400	50% V5 = Very fast

The length of the leaf is used to determine both the maximum number of cycles per hour and the consecutive cycles, while its weight is used to determine the cycle reduction percentage and the maximum speed allowed; for example, if the leaf is 5 m long it, we will have 23 cycles/hour and 11 consecutive cycles. However, if the leaf weighs 350 kg, the cycles must be reduced to 50%, resulting in 11 cycles/hour and 5 consecutive cycles, while the maximum speed allowed is V5: "Very fast". To prevent overheating, the control unit has a manoeuvre limiter that works based on the motor force and duration of the cycles, intervening whenever the maximum limit is exceeded. The manoeuvre limiter also measures the ambient temperature and further reduces the number of manoeuvres in case of particularly high temperatures.

3.2.1 Product durability

The product's durability is its average economic life value and is strongly influenced by the degree of severity of the manoeuvres: in other words, the sum of all factors that contribute to product wear.
To estimate the durability of your automated device, proceed as follows:

1. add the values of the items in "***Table 3***" relative to the system's conditions
2. in the graph shown in "***Figure 2***", from the value obtained above, draw a vertical line until it intersects the curve; from this point, draw a horizontal line until it intersects the line of the "manoeuvre cycles". The corresponding value is the estimated durability of the product.

The durability values shown in the graph can only be obtained if the maintenance schedule is strictly observed – see the "***PRODUCT MAINTENANCE***" chapter. The durability is estimated on the basis of the design calculations and the results of tests effected on prototypes. Being an estimate, therefore, it offers no explicit guarantee of the product's actual useful life.

Example of durability calculation: automation of a gate with a 4.5 m-long leaf weighing 250 kg, installed near the sea:
"***Table 3***" shows the severity indices for this type of installation: 10% ("Door length"), 15% ("Door weight") and 15% ("Presence of dust, sand or salt").
These indices must be summed up to obtain the overall severity index, which in this case amounts to 40%. With the value found (40%), check the horizontal axis (severity index) of the graph and identify the value corresponding to the number of "manoeuvre cycles" the product will be able to complete throughout its life, equal to roughly 105,000 cycles.

Table 3

PRODUCT DURABILITY		
		Severity index
Leaf length	**< 3 m** **3 - 4 m** **4 - 5 m** **5 - 6 m**	0% 5% 10% 20%
Leaf weight	**< 200 kg** **200 - 300 kg** **300 - 400 kg**	0% 15% 30%
Ambient temperature greater than 40°C or below 0°C, or humidity greater than 80%		20%
Presence of dust, sand or salinity		15%
Motor speed setting greater than "L4 fast"		15%

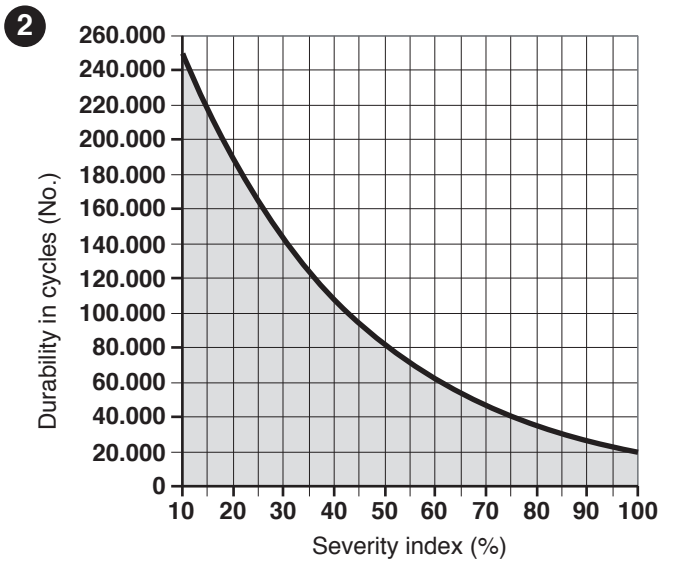

3.3 PRODUCT IDENTIFICATION AND OVERALL DIMENSIONS

The overall dimensions and the label (**A**), which allows for identifying the product, are shown in "***Figure 3***".

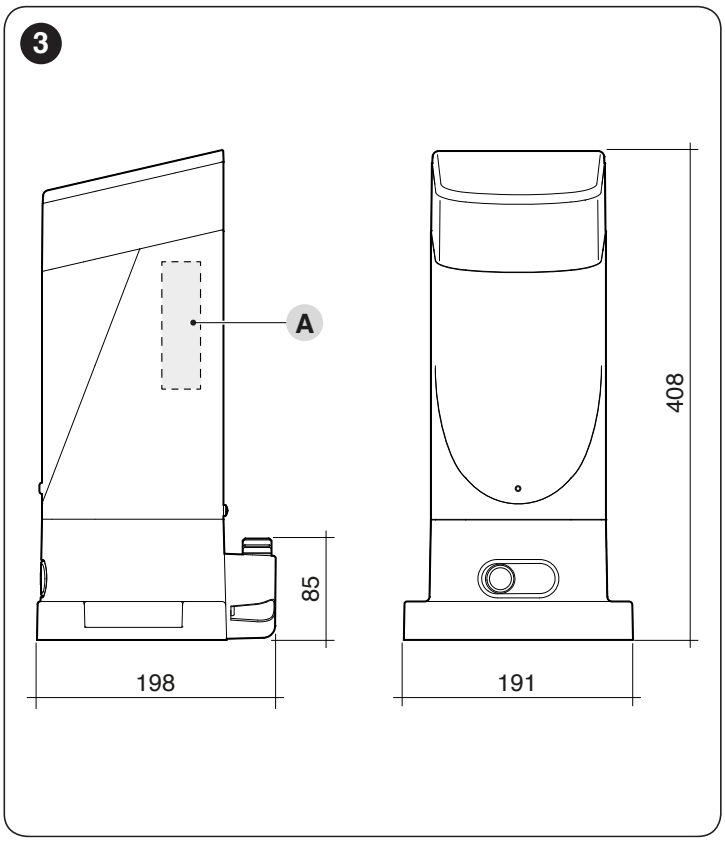

3.4 PRE-INSTALLATION WORKS

The figure shows an example of an automation system, constructed using **Nice** components.

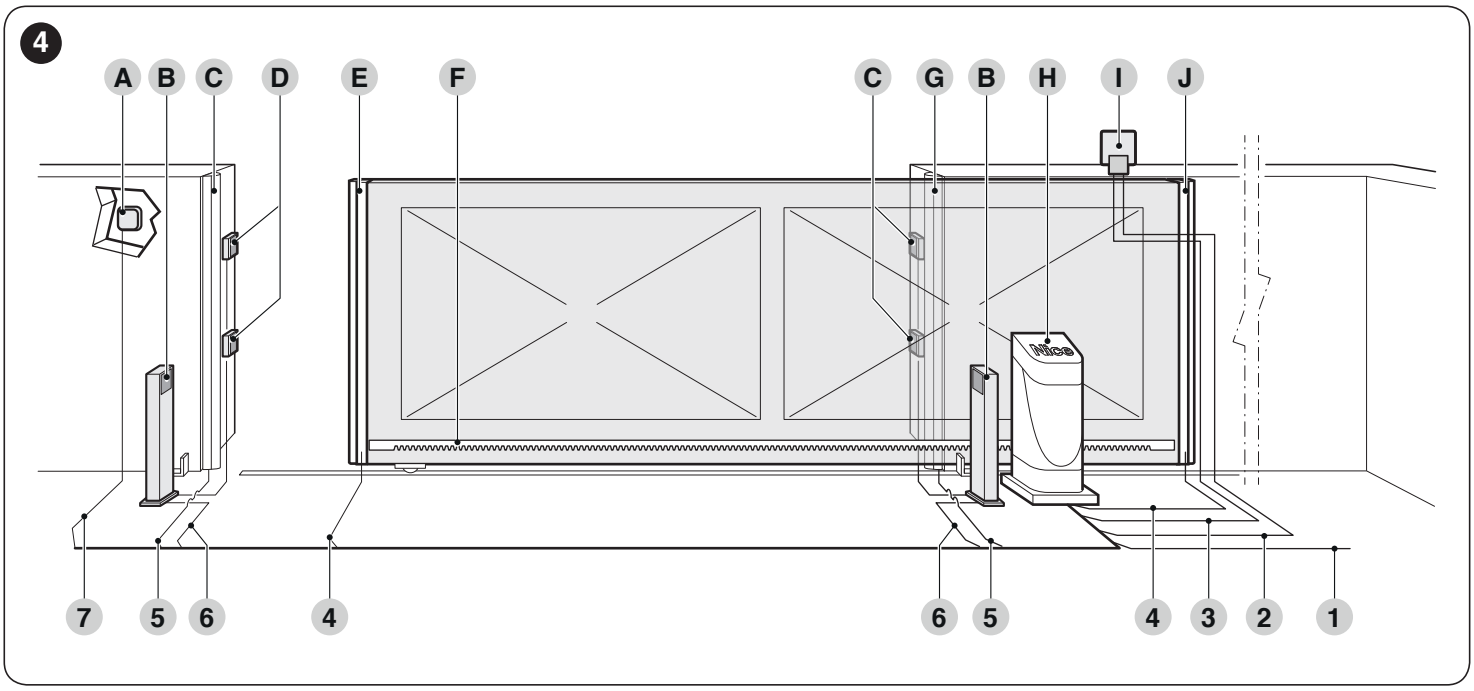

A Key selector
B Photocells on column
C Main fixed edge (optional)
D Photocells
E Main movable edge
F Rack
G Secondary fixed edge (optional)
H **SLH400**
I Warning light with incorporated antenna
J Secondary movable edge (optional)

These above-mentioned components are positioned according to a typical standard layout. Using the layout in "***Figure 4***" as a reference, define the approximate position in which each component of the system will be installed.

Table 4

TECHNICAL SPECIFICATIONS OF ELECTRICAL CABLES	
Identification no.	**Cable characteristics**
1	GEARMOTOR POWER SUPPLY cable 1 cable 3 x 1.5 mm² Maximum length 30 m [**note 1**]
2	WARNING LIGHT cable 1 cable 2 x 0.5 mm² Maximum length 20 m
3	ANTENNA cable 1 x RG58-type shielded cable Maximum length 20 m; recommended < 5 m
4	MOVABLE EDGES cable 1 cable 2 x 0.5 mm² [**note 4**] Maximum length 30 m [**note 5**]
5	FIXED EDGES cable 1 cable 2 x 0.5 mm² [**note 4**] Maximum length 30 m
6	PHOTOCELL cable 1 cable 2 x 1.5 mm² Maximum length 30 m [**note 2**]
7	KEY SELECTOR cable 2 cables 2 x 0.5 mm² [**note 3**] Maximum length 50 m

Note 1 If the power supply cable is longer than 30 m, a cable with larger cross-sectional area (3 x 2.5 mm²) must be used and a safety earthing system must be installed near the automation.

Note 2 If the BlueBus cable is longer then 30 m, up to maximum 50 m, it is necessary to use a cable with a greater cross-sectional area (2 x 1 mm²).

Note 3 These two cables can be replaced by a single 4 x 0.5 mm² cable.

Note 4 If more than one edge is present, refer to the "***STOP input***" paragraph for the type of connection recommended.

Note 5 Movable edges must be connected to sliding leaves using special devices, which enable the connection even when the leaf is moving.

Before proceeding with the installation, prepare the required electrical cables by referring to "Figure 4" and to that stated in the "*TECHNICAL SPECIFICATIONS*" chapter.

The cables used must be suited to the type of environment of the installation site.

When laying the pipes for routing the electrical cables, take into account that any water deposits in the junction boxes may cause the connection pipes to form condensate inside the control unit, thus damaging the electronic circuits.

YAYDOOR www.yaydoor.com

3.5 INSTALLING THE GEARMOTOR

Incorrect installation may cause serious physical injury to the person working on the system or to its future users.

Before starting to assemble the automation, complete the preliminary checks described in the "*Pre-installation checks*" and "*Product usage limits*" paragraphs.

Before proceeding with installation, it is advisable to position the door halfway along its path and then anchor the gearmotor to the foundation plate. This ensures that the mechanical limit switches can self-adjust.

If the supporting surface already exists, the gearmotor must be mounted directly onto the surface using appropriate fasteners, for example expansion bolts.
Alternatively, to mount the gearmotor:

1. dig a suitably sized foundation using the indicated measurements as a reference

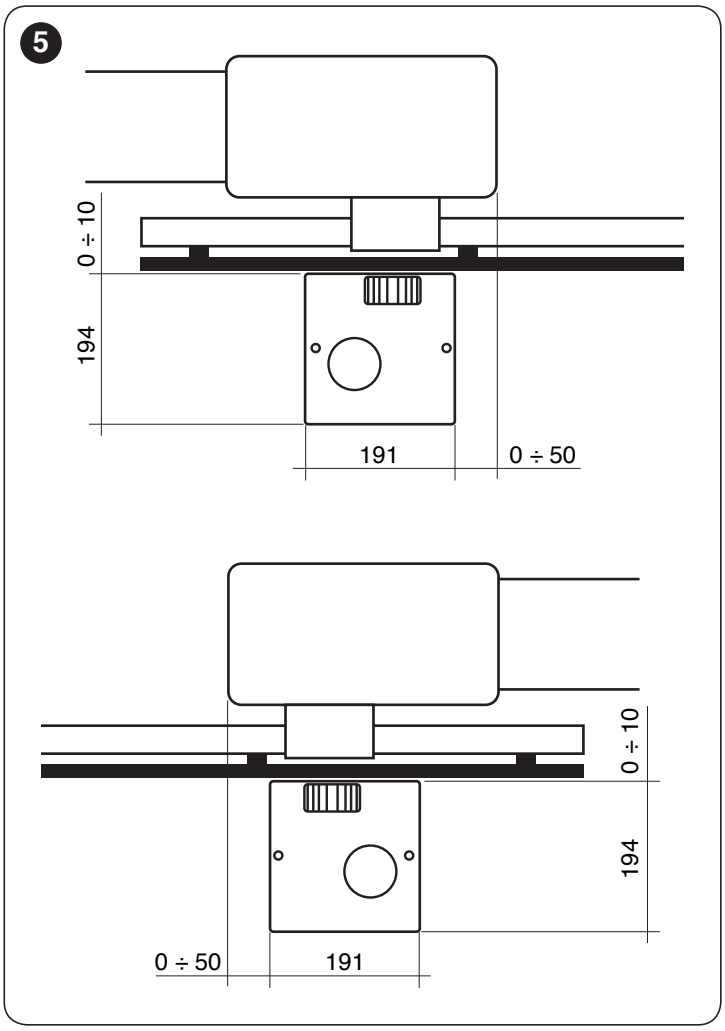

2. arrange one or two pipes for routing the electrical cables

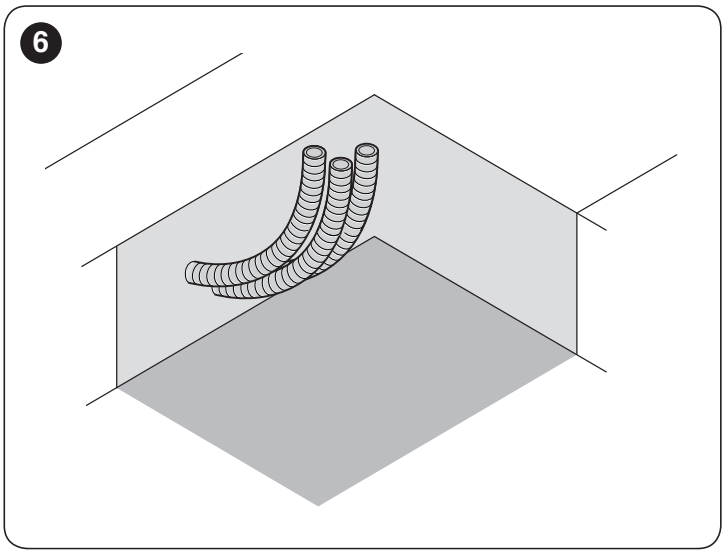

3. assemble the two anchoring devices (**A**) onto the foundation plate, placing one nut under and one over the plate; the nut beneath the plate must be tightened so that the threaded part protrudes by roughly 20÷30 mm above the plate

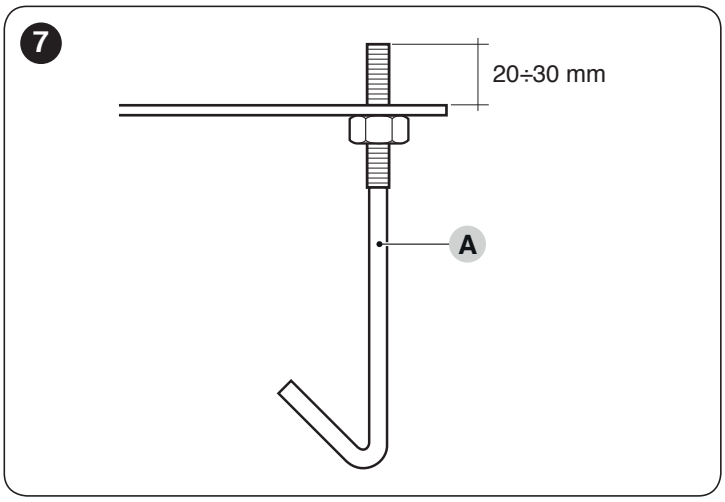

4. pour the concrete and, before it starts to set, place the foundation plate (**B**) at the levels indicated previously; make sure that it lies parallel to the gate and perfectly level

5. wait for the concrete to set fully

6. remove the two nuts above the plate (**C**)

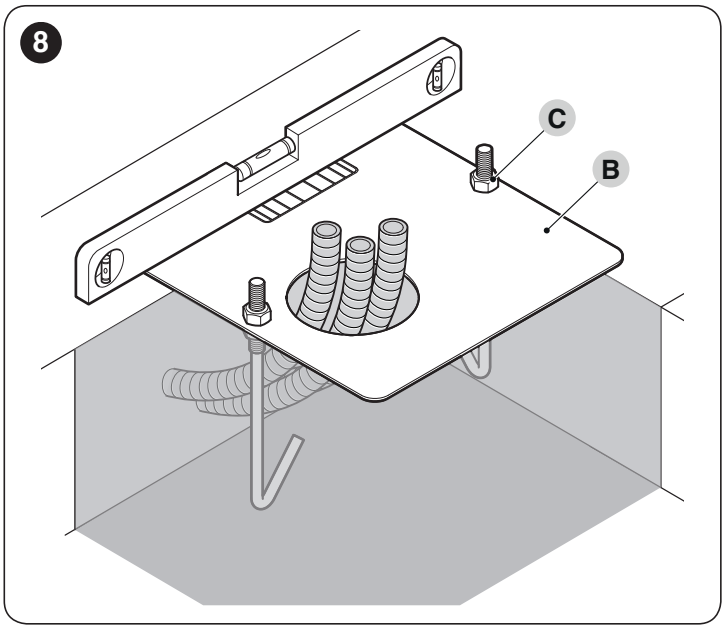

7. place the gearmotor (**D**) on the plate
8. make sure that the gearmotor lies perfectly parallel with the leaf and then slightly tighten the two nuts and washers provided

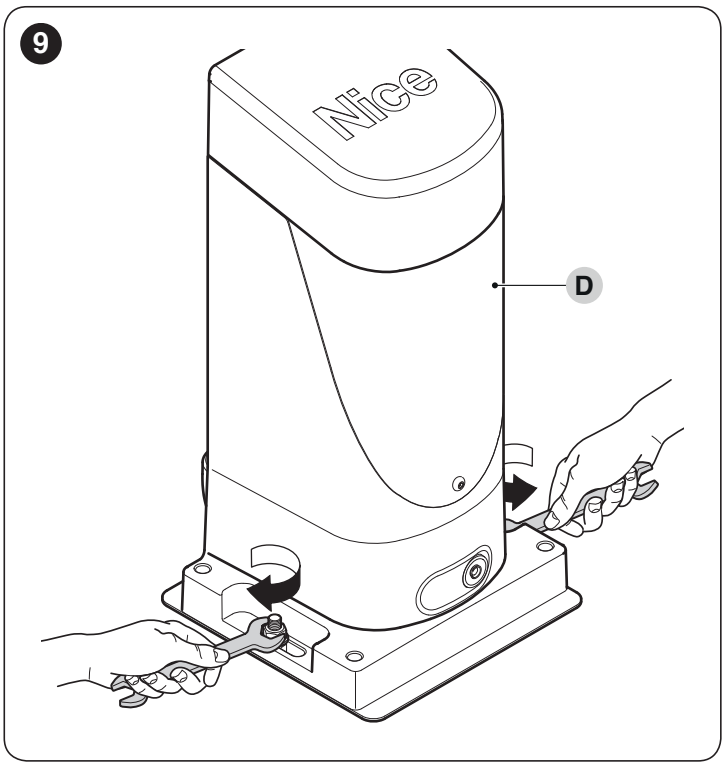

9. at this point, if the rack is already present, vigorously tighten the gearmotor's fixing nuts, cover the fixing nuts with the relevant caps ("***Figure 12***") and adjust the mechanical limit switches as described in the "***Adjusting the mechanical limit switches***" paragraph

If the rack must to be installed, proceed as follows:
10. unlock the gearmotor as indicated in the "***Manually unlocking and locking the gearmotor***" paragraph
11. manually position the door at least 50 cm away from the limit switch stop (during the closing phase)
12. place the rack on the pinion then verify that the start of the rack matches the start of the gate leaf

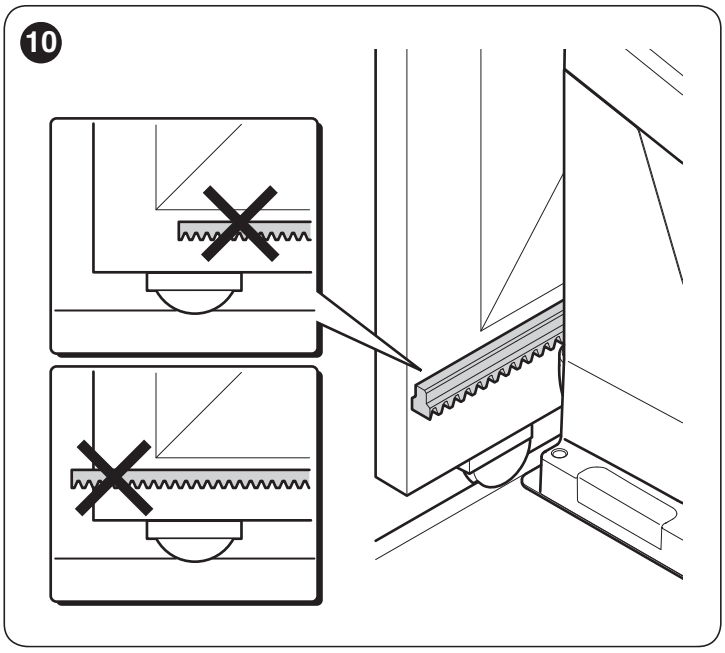

13. check that the clearance between the rack and pinion is around 1–2 mm along the entire length
14. fasten the rack to the gate leaf with adequate fasteners

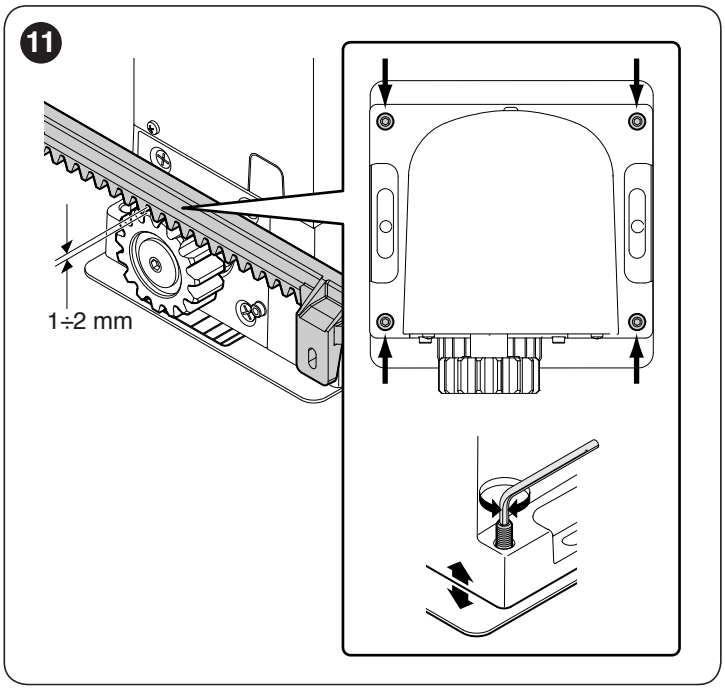

15. slide the gate and always use the pinion as a reference to fasten the other elements of the rack
16. cut off the excess section of rack
17. try opening and closing the gate leaf several times and check that the rack slides aligned on the pinion with a maximum misalignment of 5 mm
18. vigorously tighten the fixing nuts of the gearmotor, making sure that it is firmly anchored to the ground; cover the nuts with the relevant caps (**E**).

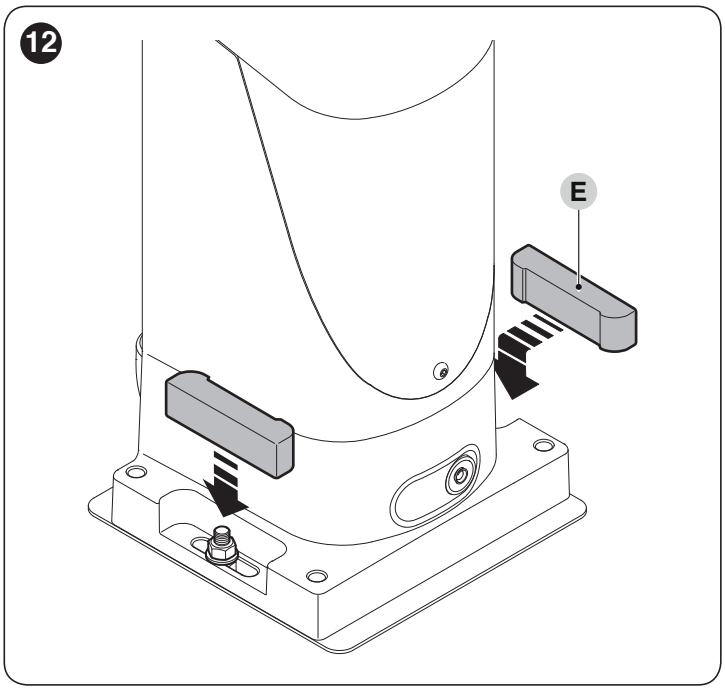

3.6 ADJUSTING THE MECHANICAL LIMIT SWITCHES

To adjust the limit switches, proceed as follows:

1. unlock the gearmotor with the relevant key provided (refer to the "***Manually unlocking and locking the gearmotor***" paragraph)
2. manually perform a complete opening and closing manoeuvre to allow the mechanical limit switches to self-adjust.

During this manoeuvre, check that the rack moves aligned with the pinion, with a maximum misalignment of 5 mm, and that there is a 1–2 mm clearance between pinion and rack along its entire length.

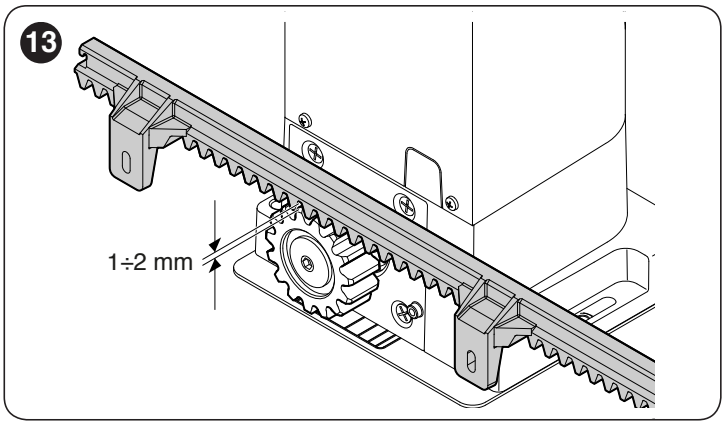

3. lastly, manually position the leaf halfway along its path and lock the gearmotor using the relevant key (refer to the "***Manually unlocking and locking the gearmotor***" paragraph).

3.7 MANUALLY UNLOCKING AND LOCKING THE GEARMOTOR

The gearmotor is equipped with a mechanical unlocking device that can be used to open and close the gate manually.
These manual operations should only be performed in case of a power outage, malfunctions or during the installation phases.
To unlock the device:

4. insert the key (**A**) and turn it clockwise by 90°

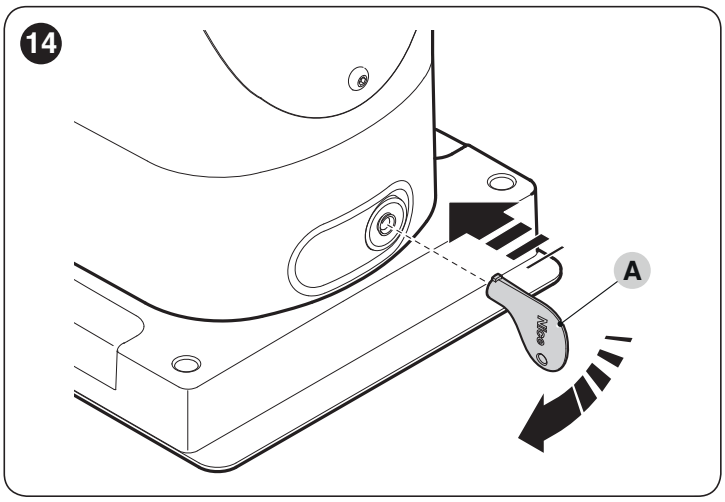

5. the gate leaf can now be moved manually to the desired position.

To lock the motor:

1. turn the key (**A**) anti-clockwise by 90°
2. remove the key.

4 ELECTRICAL CONNECTIONS

4.1 PRELIMINARY CHECKS

All electrical connections must be made with the system disconnected from the mains electricity and with the back-up battery (if present) disconnected.

The connection operations must only be carried out by qualified personnel.

To make the electrical connections:

1. insert all the connecting cables into the various devices, leaving them 20–30 cm longer than necessary. Refer to "***Table 4***" for the type of cables and to "***Figure 4***" for the connections.
2. use a clamp to hold together all the cables entering the gearmotor then place the clamp slightly below the cable entry hole
3. connect the power cable (**A**) to the relevant terminal as shown in the figure, then use another clamp to fasten the cable onto the first cable ring

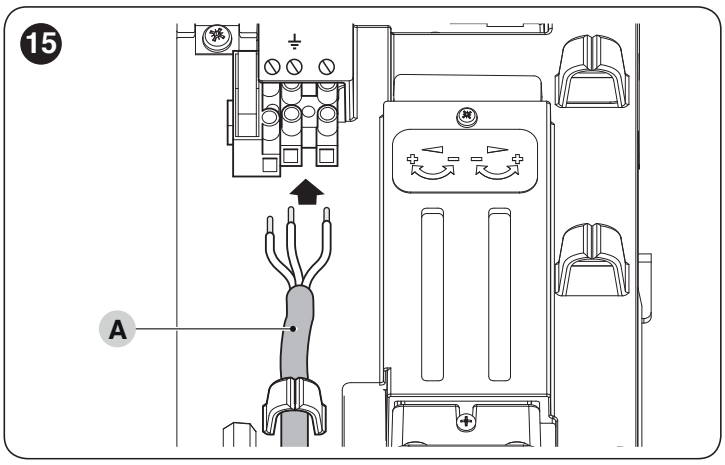

4. connect the other cables according to the diagram shown in "***Figures 16***" and ***17***. For greater convenience, the terminals are removable.
5. after making the connections, lock the cables in the appropriate rings. The excess part of the antenna cable must be secured to the other cables.

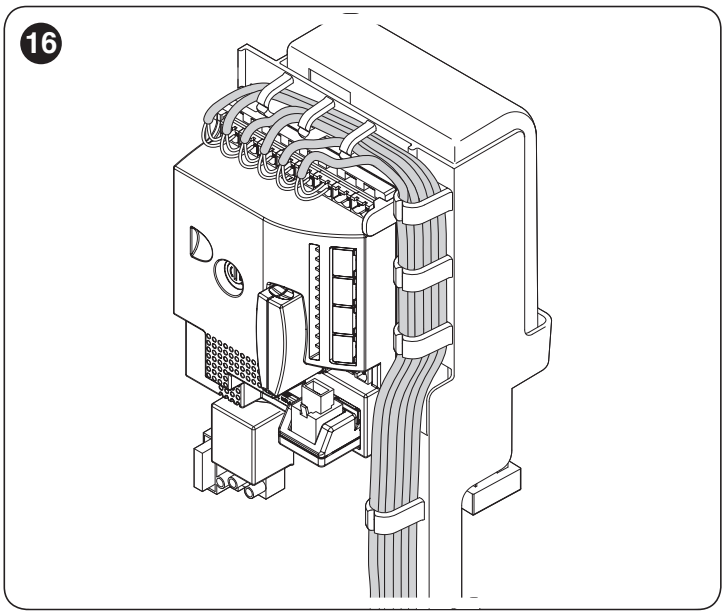

To connect 2 motors on opposite leaves, refer to the "*Gearmotor in SLAVE mode*" paragraph.

4.2 WIRING DIAGRAM AND DESCRIPTION OF CONNECTIONS

4.2.1 Wiring diagram

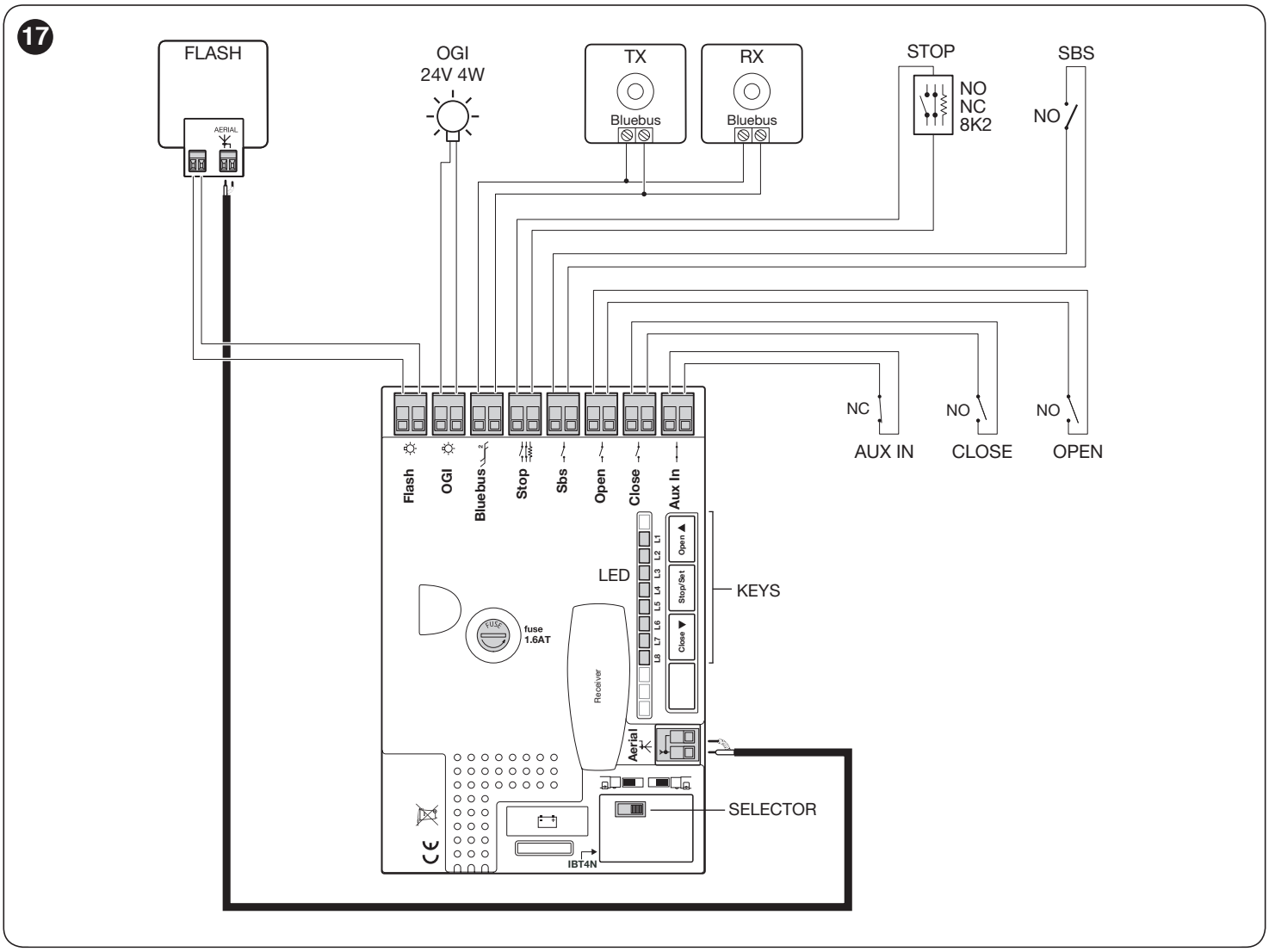

4.2.2 Description of connections

Table 5

ELECTRICAL CONNECTIONS	
Terminals	**Description**
FLASH	Output for one or two **Nice** or similar type warning lights with 12 V bulb only, maximum 21 W.
OGI	"Open Gate Indicator" output; a 24 V (max 4 W) signalling light can be connected. It can also be programmed for other functions; see the "***Level 2 programming (adjustable parameters)***" paragraph.
BLUEBUS	This terminal can be used to connect compatible devices, which are all connected in parallel with only two wires carrying both the electric power and communication signals. For further information on the BlueBUS, refer to the "***BlueBUS***" paragraph.
STOP NO-NC-8K2	Input for devices that suspend or even stop the current manoeuvre; "Normally Closed" and "Normally Open" contacts or fixed resistor devices can be connected by suitably configuring the input. For further information on the STOP function, refer to the "***STOP input***" paragraph.
Sbs	Input for devices that control the movement in Step-by-Step mode; it is possible to connect "Normally Open" contacts.
OPEN	Input for devices that control the opening movement only; it is possible to connect "Normally Open" contacts.
CLOSE	Input for devices that control the closing movement only; it is possible to connect "Normally Open" contacts.
AUX_IN (Auxiliary Input)	Input for devices that suspend or stop the current manoeuvre; "Normally Closed" contacts can be connected to this input. The Oview accessory can be used to modify the input's functions; the input is factory-configured as a STOP input.
ANTENNA	Antenna connection input for radio receiver; the antenna is incorporated in the warning light; alternatively, an external antenna can be used.

5 FINAL CHECKS AND START-UP

It is advisable to position the leaf approximately halfway along its path before starting the automation check and start-up phases, so that the leaf is free to open and close.

5.1 CHOOSING THE DIRECTION

Choose the direction of the opening manoeuvre on the basis of the gearmotor's position in relation to the gate leaf. If the leaf must move towards the left to open, shift the selector towards the left as shown in "***Figure 18***".

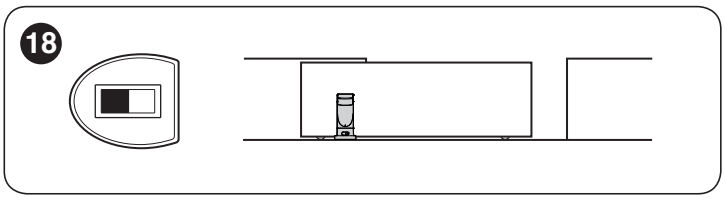

If the leaf must move towards the right to open, the selector must be shifted towards the right as shown in "***Figure 19***".

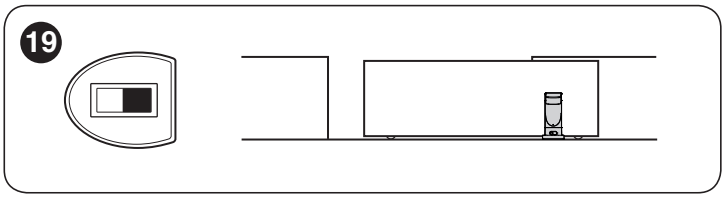

5.2 POWER SUPPLY CONNECTION

The power supply connections must only be made by qualified and experienced personnel possessing the necessary requirements and in full conformity to the laws, regulations and standards in force.

As soon as the product is powered, a few simple checks should be carried out:

1. check that the BlueBus LED flashes regularly with one flash per second.
2. make sure that the LEDs on the photocells (both the TX and RX) also flash; the type of flashing is irrelevant, since it depends on other factors.
3. make sure that the warning light connected to the FLASH output and the indicator light connected to the OGI output are off.

If the above conditions are not satisfied, immediately switch off the power supply to the control unit and carefully check the electrical connections.
Further useful information on searching and diagnosing faults is included in the "***Troubleshooting***" paragraph.

5.3 DEVICE LEARNING

Once the power supply has been connected, the control unit must recognise the devices connected to the "**BlueBUS**" and "**STOP**" inputs. Prior to this phase, LEDs "**L1**" and "**L2**" will flash to signal that the device learning procedure must be performed.

The learning phase must be carried out even if no device is connected to the control unit.

To do this:

1. simultaneously press and hold the **[Open ▲]** and **[Stop/Set]** buttons
2. release the buttons when LEDs **"L1"** and **"L2"** start flashing quickly (after roughly 3 seconds)
3. wait a few seconds until the control unit has completed the device learning phase
4. once this phase terminates, the **"Stop"** LED must be lit and LEDs **"L1"** and **"L2"** must switch off (LEDs "**L3**" and "**L4**" could start flashing).

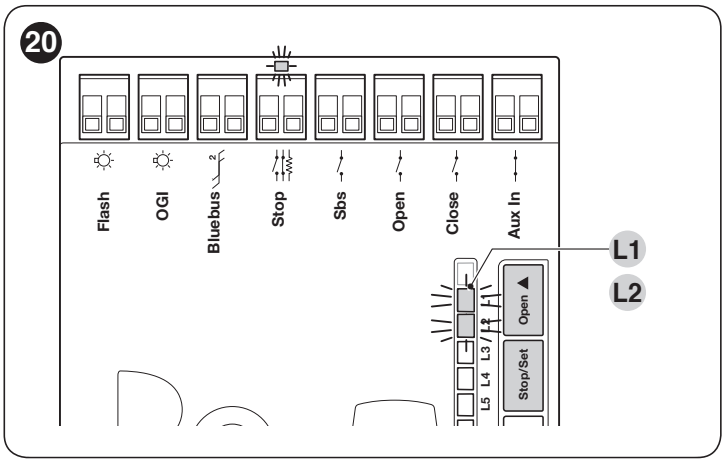

The learning process of connected devices can be repeated at any time, even after the installation (for example, whenever a device must be added); to complete the new learning process, refer to the "***Learning of other devices***" paragraph.

5.4 LEAF LENGTH LEARNING

Once the devices have been learned, LEDs **"L3"** and **"L4"**; will start flashing; this means that the control unit must recognise the length of the gate leaf (distance between the closing and opening limit switches); this measurement is necessary to calculate the deceleration points and the partial opening point.
To do this:

1. simultaneously press and hold the **[Close ▼]** and **[Stop/Set]** buttons
2. release the buttons when the manoeuvre starts (after roughly 3 seconds)
3. check that the current manoeuvre is an opening manoeuvre. If not, press the **[Stop/Set]** button and carefully check the "***Choosing the direction***" paragraph then repeat the process from point 1
4. wait for the control unit to complete the opening manoeuvre until the gate reaches the opening limit switch; the closing manoeuvre will start immediately afterwards
5. wait for the control unit to fully close the gate.

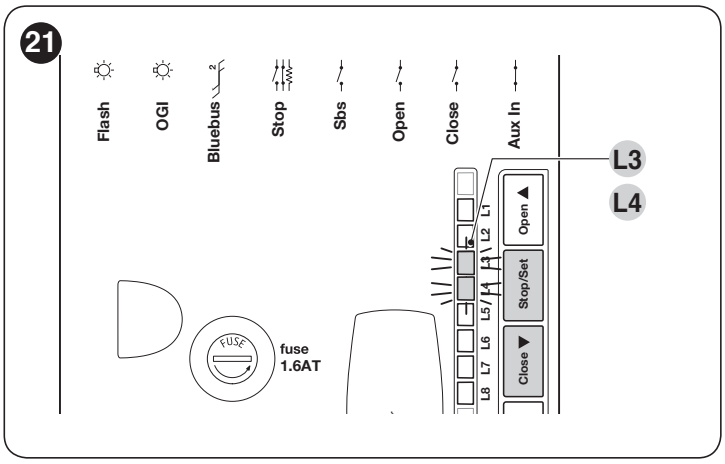

If the above conditions are not satisfied, immediately switch off the power supply to the control unit and carefully check the electrical connections.
Further useful information on searching and diagnosing faults is included in the "***Troubleshooting***" paragraph.

If the limit switch positions must be adjusted more finely, use the adjustment knobs located inside the gearmotor.
To do this:

1. remove the locking cover (**A**) of the two adjustment knobs (**B**)

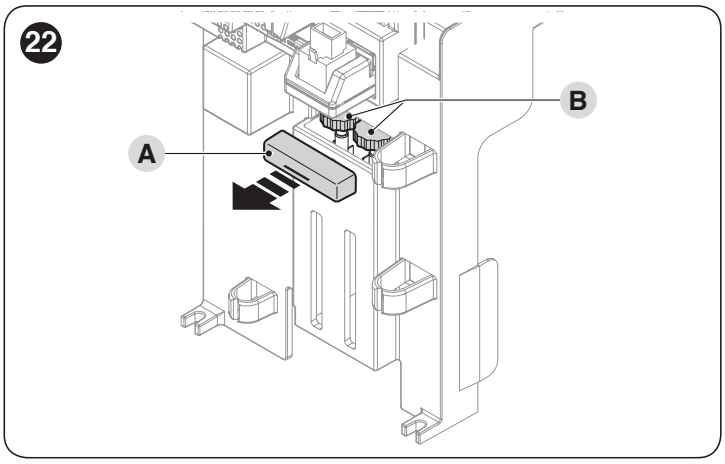

2. press the **[Open▲]** or **[Close ▼]** button on the control unit to open or close the gate, depending on the position to be defined
3. identify the adjustment knob with the arrow indicating the direction of the limit switch to be adjusted and turn it by half a turn (corresponding to roughly 3 cm of gate movement)

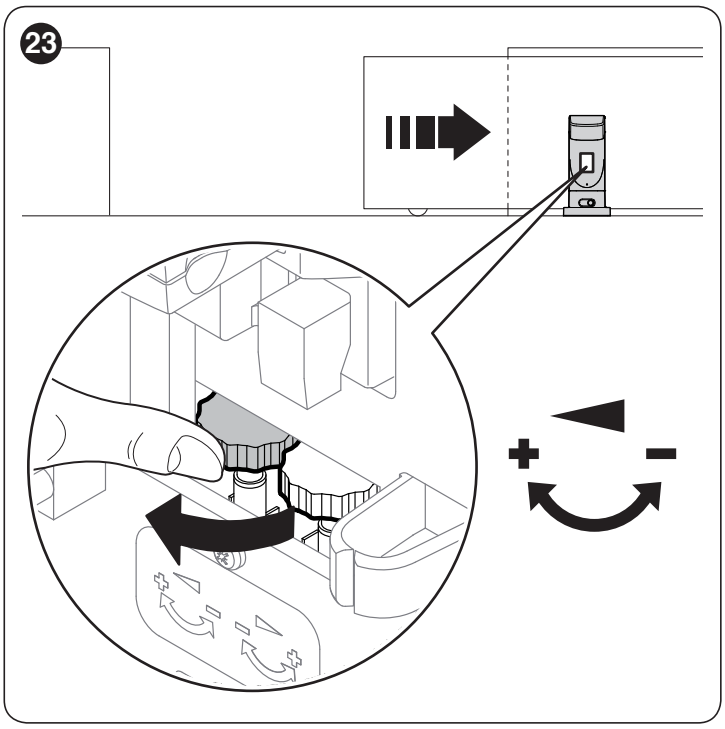

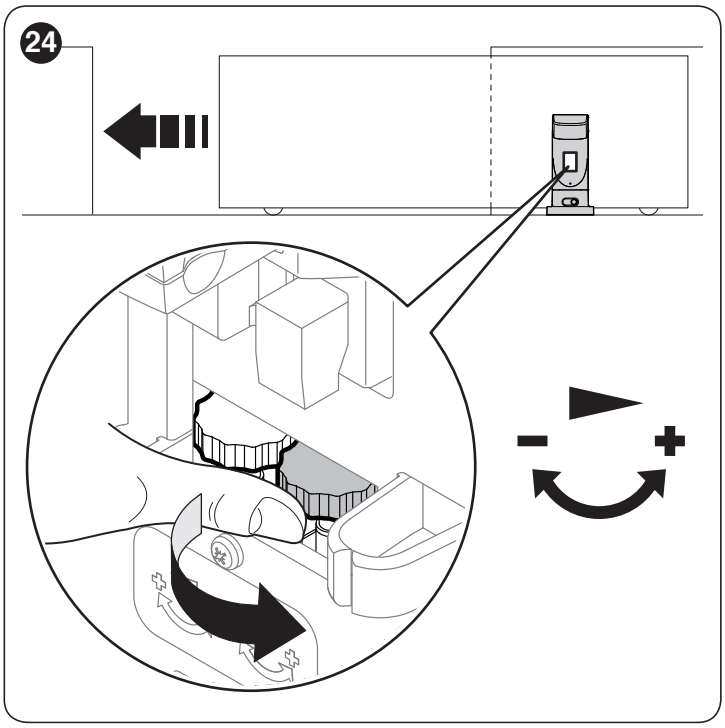

4. subsequently, press the **[Open▲]** or **[Close ▼]** button on the control unit again to open or close the leaf and register the new position. If necessary, repeat the operation until the leaf reaches the desired limit switch.

If, at the start of the installation phase, the leaf is not correctly positioned midway along its path when the motor is secured and the pinion is moved along the rack, it may be necessary to reduce the position of the limit switch on one of the two sides.

If the limit switch position must be defined with greater precision, move the door back a few centimetres by pressing the [Open▲] or [Close ▼] button on the control unit, then give the command again for the direction to be checked.

Note If a manual learning procedure has already been completed and the entire procedure must be repeated, put the limit switches back to their initial position by turning the 2 adjustment knobs (**B**) towards the "**–**" mark until the micro-switches click. Repeat the entire limit switch adjustment procedure.

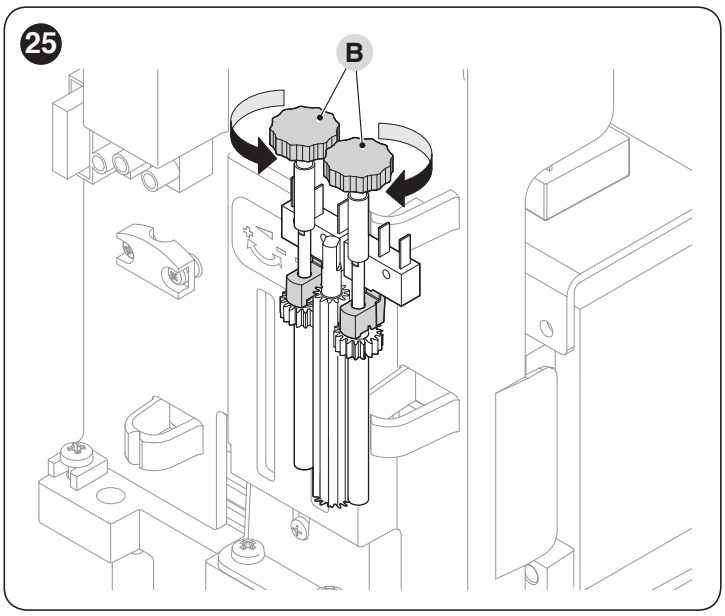

5.5 CHECKING THE GATE MOVEMENT

Once the leaf length has been learned, it is advisable to carry out a few manoeuvres in order to verify that the gate moves properly.

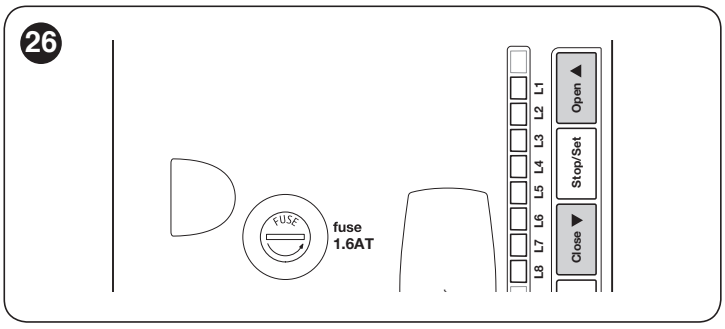

To do this:

1. press the **[Open ▲]** button to open the gate; check that the gate opens regularly without any variations in speed; the leaf must only slow down when it is between 70 cm and 50 cm from the opening limit switch and then stop at 2–3 cm from the opening mechanical stop when the limit switch triggers
2. press the **[Close ▼]** button to close the gate; check that the gate closes regularly without any variations in speed; the leaf must only slow down when it is between 70 cm and 50 cm from the closing limit switch and then stop at 2–3 cm from the closing mechanical stop when the limit switch triggers
3. during the manoeuvre, check that the warning light flashes with 0.5 s on/0.5 s off intervals. If present, also check that the indicator connected to the OGI terminal flashes: slow during the opening movement, fast during the closing movement
4. open and close the gate several times to make sure that there are no points of excessive friction and that there are no defects in the assembly or adjustments
5. check that the gearmotor, rack and limit switch brackets are solid, stable and suitably resistant even during sudden gate acceleration or slowdown movements.

5.6 CONNECTING OTHER DEVICES

If the user needs to power external devices, such as a proximity reader for transponder cards or the light of the key selector switch, power can be tapped as shown in the figure.
The power supply voltage is 24V⎓ -30% ÷ +50% with a maximum available current of 100mA.

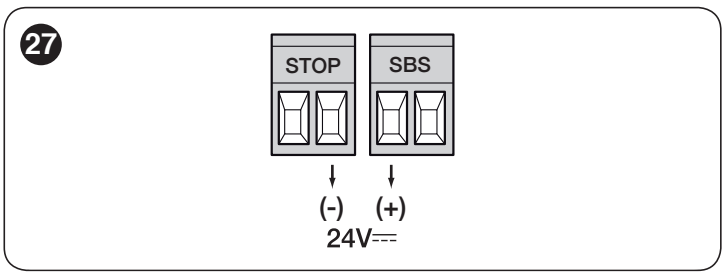

6 TESTING AND COMMISSIONING

These are the most important phases of the automation's construction, as they ensure maximum safety of the system. The test can also be used to periodically verify the devices making up the automation.

Testing and commissioning of the automation must be performed by skilled and qualified personnel, who are responsible for the tests required to verify the solutions adopted according to the risks present, and for ensuring that all legal provisions, standards and regulations are met, in particular all the requirements of the EN 12445 standard, which defines the test methods for checking gate automations.

The additional devices must undergo specific testing, both in terms of their functions and their proper interaction with the control unit. Refer to the instruction manuals of the individual devices.

6.1 TESTING

To run the test:

1. verify that all the instructions stated in the "***GENERAL SAFETY WARNINGS AND PRECAUTIONS***" chapter have been strictly observed
2. unlock the gearmotor as indicated in the "***Manually unlocking and locking the gearmotor***" paragraph
3. make sure that the leaf can be moved manually during both the opening and closing phases with a force not exceeding 390N (roughly 40 kg)
4. lock the gearmotor
5. using the control devices (transmitter, control button, key selector, etc.), test the gate's opening, closing and stoppage movements to make sure that the leaves move as intended. Several tests should be carried out to assess the movement of the leaves and detect any defects in the installation and adjustment, besides any points of excessive friction
6. check, one-by-one, that all safety devices mounted on the system (photocells, sensitive edges, etc.) work properly. Each time a device intervenes, the "**Bluebus**" LED on the control unit will emit two faster flashes to confirm the recognition
7. if potentially dangerous situations due to the movement of the leaves have been prevented by limiting the impact force, the latter must be measured according to the EN 12445 standard and, if the "motor force" control is used to aid the system in reducing the impact force, it is necessary to test various adjustments to find the one that gives the best results.

6.2 COMMISSIONING

Commissioning can only be performed after all testing phases have been successfully completed.

Before commissioning the automation, ensure that the owner is properly informed of all residual risks and hazards.

The gate cannot be commissioned partially or under "temporary" conditions.

To commission the automation:

1. compile the automation's technical file, which must include the following documents: overall drawing of the automation, wiring diagram, risk assessment and relative solutions adopted, the manufacturer's declaration of conformity for all devices used and the declaration of conformity compiled by the installer
2. affix a permanent label or sign near the gate specifying the operations for unlocking the gate and manoeuvring it manually "***Figure 28***"

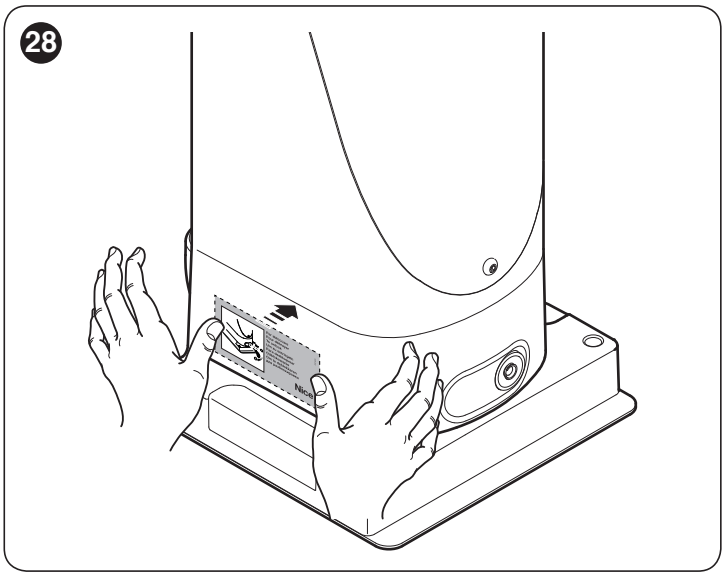

3. affix a data plate on the gate specifying at least the following data: type of automation, name and address of the manufacturer (responsible for commissioning), serial number, year of manufacture and CE mark
4. compile the declaration of conformity of the automation and hand it to the owner of the automation
5. compile the User Manual of the automation and hand it to the owner of the automation
6. compile and provide the owner with the automation's "Maintenance schedule", containing the maintenance instructions for all the automation's devices.

For all the above-mentioned documentation, Nice – through its technical assistance service – provides the following: pre-completed forms.

7 PROGRAMMING

The following 3 buttons are located on the control unit: **[Open ▲]**, **[Stop/Set]** and **[Close ▼]** ("***Figure 29***") which can be used both for commanding the control unit during the testing phase and to programme the available functions.

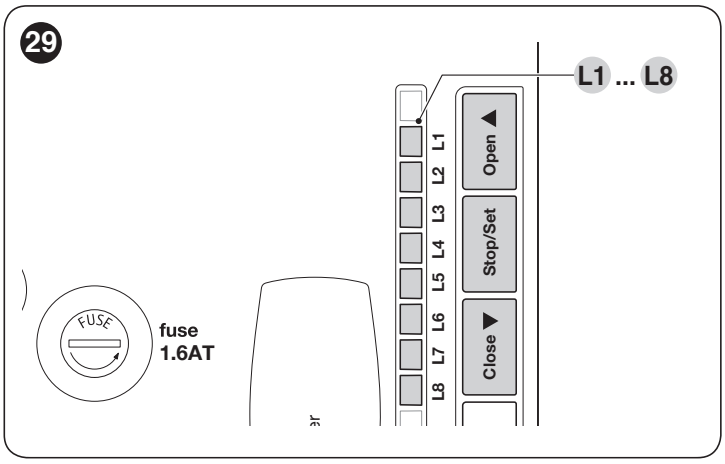

The available programmable functions are grouped into **two levels** and their operating status is signalled by eight LEDs "**L1 ... L8**" located on the control unit (LED lit = function enabled; LED off = function disabled).

7.1 USING THE PROGRAMMING BUTTONS

[Open ▲]:
- Button for commanding the gate opening
- Selection button during the programming phase.

[Stop/Set]:
- Button used to stop a manoeuvre
- If pressed for more than 5 seconds, it allows for entering the programming mode.

[Close ▼]
- Button for commanding the gate's closure
- Selection button during the programming phase.

YAYDOOR www.yaydoor.com

7.2 LEVEL 1 PROGRAMMING (ON-OFF)

All the Level 1 functions are factory-set to "**OFF**" and can be modified at any time. To check the various functions, refer to "***Table 6***".

7.2.1 Level 1 programming procedure

The user has maximum 10 seconds to press the buttons consecutively during the programming procedure, after which time the procedure terminates automatically and memorises the changes made up to then.

To perform Level 1 programming:

1. press and hold the **[Stop/Set]** button until LED "**L1**" starts flashing
2. release the **[Stop/Set]** key when the "**L1**" LED starts flashing
3. press the **[Open ▲]** or **[Close ▼]** button to move the flashing LED to the LED associated with the function to be modified
4. press the **[Stop/Set]** button to change the status of the function:
   - short flash = **OFF**
   - long flash = **ON**
5. wait 10 seconds (maximum time) to exit the programming mode.

To set other functions to "ON" or "OFF", while the procedure is running, repeat points 2 and 3 during the phase itself.

Table 6

LEVEL 1 FUNCTIONS (ON-OFF)		
LED	**Function**	**Description**
L1	**Automatic closing**	**Function ENABLED:** after an opening manoeuvre there is a pause (equal to the set pause time), after which the control unit automatically starts a closing manoeuvre. The pause time is set by default to 30 seconds. **Function NOT ENABLED:** the system works in "semi-automatic" mode.
L2	**Close after photo**	**Function ENABLED:** the behaviour changes depending on whether the "Automatic Closing" function is enabled or not. With "Automatic Closing" disabled: the gate will always reach the fully open position (even if the photocell disengages before). The disengaging of the photocell triggers the automatic re-closing after a 5-second pause. When "Automatic Closing" is enabled: the opening manoeuvre stops immediately after the photocells have disengaged. After 5 seconds, the gate will start closing automatically. The "Close After Photo" function is always disabled in manoeuvres interrupted by a Stop command. **Function DISABLED:** the pause time is that which has been programmed or automatic re-closing will not take place if the function is disabled.
L3	**Always Close**	**Function ENABLED:** in the event of a blackout, even of short duration, if the control unit detects that the gate is open when the electricity is restored, it automatically starts a closing manoeuvre preceded by a 5-second pre-flash. **Function DISABLED:** when the electricity is restored, the gate remains in the same position.
L4	**Stand-by**	**Function ENABLED:** 1 minute after the completion of the manoeuvre, the control unit switches off the BlueBUS output (and, therefore, the devices) and all LEDs, with the exception of the BlueBUS LED, which flashes more slowly. When the control unit receives a command, it restores full operation. **Function DISABLED:** there will be no reduction in consumption. This function is useful, in particular, during operation with the back-up battery.
L5	**Peak**	**Function ENABLED:** the gradual acceleration at the beginning of each manoeuvre will be disengaged; it allows for having peak thrust and is useful whenever static friction is high, e.g. if snow or ice are blocking the gate. **Function DISABLED:** the manoeuvre will start with a gradual acceleration.
L6	**Pre-flashing**	**Function ENABLED:** a 3-second pause can be added between the switching on of the warning light and the start of the manoeuvre, to warn the user in advance of a potentially dangerous situation. **Function DISABLED:** the signalling of the warning light coincides with the start of the manoeuvre.
L7	**"Close" becomes "Partial Open"**	**Function ENABLED:** the "Close" input of the control unit switches its operation to "Partial Open".
L8	**"Slave" mode**	**Function ENABLED:** it is possible to synchronise the functioning of 2 motors on opposite leaves where one motor functions as master and the other as slave; for further information, refer to the "***Gearmotor in SLAVE mode***" paragraph.

During normal operation, LEDs "L1 ... L8" are on/off depending on the status of the respective function; for example, "L1" is lit when the "Automatic Closing" function is enabled.

7.3 LEVEL 2 PROGRAMMING (ADJUSTABLE PARAMETERS)

All Level 2 parameters are factory-set as highlighted in "**GREY**" in "***Table 7***" and can be modified at any time. The parameters can be adjusted to between 1 and 8. To verify the value corresponding to each LED, refer to "***Table 7***".

7.3.1 Level 2 programming procedure

The user has maximum 10 seconds to press the buttons consecutively during the programming procedure, after which time the procedure terminates automatically and memorises the changes made up to then.

To perform Level 2 programming:

1. press and hold the **[Stop/Set]** button until LED "**L1**" starts flashing
2. release the **[Stop/Set]** key when the "**L1**" LED starts flashing
3. press the **[Open ▲]** or **[Close ▼]** button to move the flashing LED to the "**entry LED**" associated with the parameter to be modified
4. press and hold the **[Stop/Set]** button. With the **[Stop/Set]** button pressed:
   - wait roughly 3 seconds, until the LED representing the current level of the parameter to be modified lights up
   - press the **[Open ▲]** or **[Close ▼]** button to shift the LED associated with the parameter's value
5. release the **[Stop/Set]** button
6. wait 10 seconds (maximum time) to exit the programming mode.

To set multiple parameters during the procedure's execution, repeat the operations from point 2 to point 4 during the phase itself.

The set value highlighted in grey ("*Table 7*") indicates that this value is the factory setting.

Table 7

LEVEL 2 FUNCTIONS (ADJUSTABLE PARAMETERS)				
Entry LED	**Parameter**	**LED (level)**	**Set value**	**Description**
L1	**Pause Time**	L1	5 seconds	Adjusts the pause time, in other words, the time before automatic re-closure. It is only effective if the "Automatic Closing" function is enabled.
		L2	15 seconds	
		L3	**30 seconds**	
		L4	45 seconds	
		L5	60 seconds	
		L6	80 seconds	
		L7	120 seconds	
		L8	180 seconds	
L2	**Step-by-Step function**	L1	Open - Stop - Close - Stop	Controls the sequence of controls associated with the Sbs input or the 1st radio command.
		L2	**Open - Stop - Close - Open**	
		L3	Open - Close - Open - Close	
		L4	Condominium	
		L5	Condominium 2 (more than 2 sec triggers "Stop")	
		L6	Step-by-Step 2 (less than 2 sec triggers "Partial Open")	
		L7	Hold-to-run	
		L8	Opening in "semi-automatic" mode, closing in "hold-to-run" mode	
L3	**Motor speed**	L1	Very slow	Adjusts the motor speed during normal manoeuvres.
		L2	Slow	
		L3	Medium	
		L4	**Fast**	
		L5	Very fast	
		L6	Extremely fast	
		L7	Opens "Fast"; closes "Slow"	
		L8	Opens "Extremely fast"; closes "Fast"	

LEVEL 2 FUNCTIONS (ADJUSTABLE PARAMETERS)				
Entry LED	**Parameter**	**LED (level)**	**Set value**	**Description**
L4	**OGI output**	L1	"Gate Open Indicator" (G.O.I.) function	Adjusts the function associated with the OGI output [regardless of the associated function, the output – when enabled – supplies a voltage of 24 V (–30 +50%) with 4 W maximum power].
		L2	Enabled if gate leaf closed	
		L3	Enabled if gate open	
		L4	Enabled with radio output no. 2	
		L5	**Enabled with radio output no. 3**	
		L6	Active with radio output no. 4	
		L7	Maintenance indicator	
		L8	Electric lock	
L5	**Motor force**	L1	Ultra-light gate	Adjusts the motor force control system to adapt it to the gate's weight. The force control system also measures the ambient temperature and increases the motor force automatically in case of particularly cold temperatures.
		L2	Very light gate	
		L3	Light gate	
		L4	Average gate	
		L5	**Medium-heavy gate**	
		L6	Heavy gate	
		L7	Very heavy gate	
		L8	Ultra-heavy gate	
L6	**Partial Open**	L1	0,5 mt	Adjusts the degree of partial opening, which can be controlled through radio command no. 2 or with "CLOSE"; if the "Close" function is present, it switches to "Partial Open"
		L2	1 mt	
		L3	1,5 mt	
		L4	**2 mt**	
		L5	2,5 mt	
		L6	3 mt	
		L7	3,4 mt	
		L8	4 mt	
L7	**Maintenance notice**	L1	Automatic (depending on the severity of the manoeuvres)	Adjusts the number of manoeuvres after which the automation maintenance request is triggered (see the "***"Maintenance notice" function***" paragraph).
		L2	1000	
		L3	**2000**	
		L4	4000	
		L5	7000	
		L6	10000	
		L7	15000	
		L8	20000	
L8	**List of malfunctions**	**L1**	**Result of 1st manoeuvre (most recent)**	Allows for checking the type of anomaly that occurred in the last 8 manoeuvres (see the "***Anomaly log***" paragraph).
		L2	Result of 2nd manoeuvre	
		L3	Result of 3rd manoeuvre	
		L4	Result of 4th manoeuvre	
		L5	Result of 5th manoeuvre	
		L6	Result of 6th manoeuvre	
		L7	Result of 7th manoeuvre	
		L8	Result of 8th manoeuvre	

All the parameters can be adjusted as required without any contraindications; only the adjustment of the "Motor Force" could require special attention:
- high force values should not be used to compensate for points of abnormal friction on the leaf. Excessive force can jeopardise the operation of the safety system or damage the leaf
- if the "Motor Force" control is used to aid the impact force reduction system, measure the force again after each adjustment in accordance with the EN 12445 standard
- wear and weather conditions may affect the gate's movement, therefore periodic force readjustments of the motor force may be necessary.

7.4 SPECIAL FUNCTIONS

7.4.1 "Always open" function

The "Always open" function is a control unit feature that enables the user to always command an opening manoeuvre when the "**Step-by-Step**" command lasts longer than 2 seconds; this is useful, for example, for connecting a timer contact to the Sbs terminal in order to keep the gate open for a certain time frame. This feature is valid regardless of how the "Sbs" input is programmed, unless it is programmed to perform the "Close" function. Refer to the "**Step-by-Step function**" under the "***Level 2 programming (adjustable parameters)***" paragraph.

7.4.2 "Move anyway" function

This function can be used to operate the automation even one or more some safety devices fail to work properly or are out of order. The automation can be controlled in "**hold-to-run**" mode by proceeding as follows:

1. send a command to operate the gate, using a transmitter or key selector, etc. If everything functions properly, the gate will move normally, otherwise proceed with point 2

2. within 3 seconds, press the control again and hold it down

3. after roughly 2 seconds, the gate will complete the requested manoeuvre in "**hold-to-run**" mode, in other words, it will continue to move so long as the control is held down.

When the safety devices fail to work, the warning light will emit a few flashes to signal the type of problem. To verify the type of anomaly, consult the "*TROUBLESHOOTING... (troubleshooting guide)*" chapter.

7.4.3 "Maintenance notice" function

This function notifies the user when the automation needs a maintenance check. The number of manoeuvres after which the signal is triggered can be selected among 8 levels, through the "**Maintenance notice**" adjustable parameter (see paragraph "***Level 2 programming (adjustable parameters)***").
Level 1 adjustment is "automatic" and takes into account the severity of the manoeuvres, in other words, their force and duration, while the other adjustments are defined on the basis of the number of manoeuvres.

The maintenance request signal is given through the warning light (Flash) or the lamp connected to the "**OGI**" output when it is programmed as a "**Maintenance indicator**" (see paragraph "***Level 2 programming (adjustable parameters)***").

The "Flash" warning light and the maintenance indicator give the signals indicated in "*Table 8*" based on the number of manoeuvres completed with respect to the set limit.

Table 8

MAINTENANCE NOTICE THROUGH FLASH AND MAINTENANCE INDICATOR		
Number of manoeuvres	**Signal on "Flash"**	**Maintenance indicator signal**
Below 80% of the limit	Normal (0.5 sec on, 0.5 sec off)	Lit for 2 seconds at the start of the opening manoeuvre
Between 81% and 100% of the limit	Remains lit for 2 seconds at the start of the manoeuvre	Flashes for the entire duration of the manoeuvre
Exceeding 100% of the limit	Remains lit for 2 seconds at the start and end of the manoeuvre then carries on normally	Flashes always

7.4.4 Verifying the number of manoeuvres completed

The "**Maintenance notice**" function can be used to verify the number of manoeuvres completed as a percentage of the set limit.

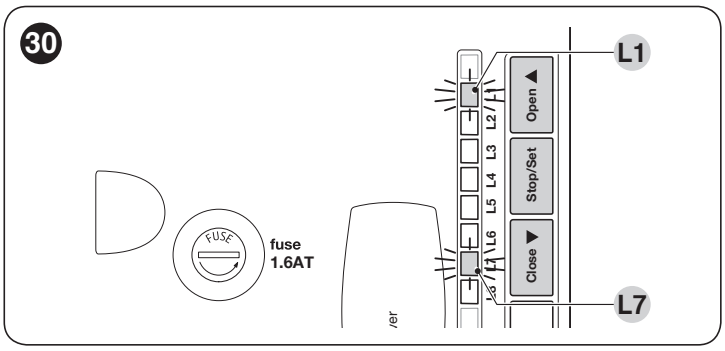

To do this:
1. press and hold the **[Stop/Set]** button until LED "**L1**" starts flashing
2. release the **[Stop/Set]** key when the "**L1**" LED starts flashing
3. press the **[Open ▲]** or **[Close ▼]** button to shift the flashing LED to "**L7**", that is, the "entry LED" for the "**Maintenance notice**" parameter
4. press and hold the **[Stop/Set]** button. With the **[Stop/Set]** button pressed:
   - wait roughly 3 seconds until the LED representing the current level of the "**Maintenance notice**" parameter lights up
   - press and immediately release the **[Open ▲]** and **[Close ▼] buttons**
   - the LED corresponding to the selected level will flash several times; the number of flashes indicates the percentage of manoeuvres completed (in multiples of 10%) with respect to the set limit. For example: with the maintenance notice set to L6, namely 10,000, if the viewing LED flashes 4 times, it means that 40% of the manoeuvres has been reached (i.e. between 4,000 and 4,999 manoeuvres). The LED will not flash unless 10% of the manoeuvres have been completed.
5. release the **[Stop/Set]** button.

7.4.5 Manoeuvre counter resetting

Once maintenance has been performed on the system, the manoeuvre counter must be reset.

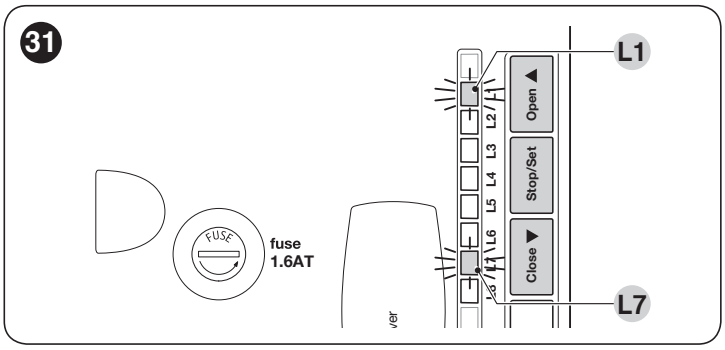

To do this:
1. press and hold the **[Stop/Set]** button until LED "**L1**" starts flashing
2. release the **[Stop/Set]** key when the "**L1**" LED starts flashing
3. press the **[Open ▲]** or **[Close ▼]** button to shift the flashing LED to "**L7**", that is, the "entry LED" for the "**Maintenance notice**" parameter
4. press and hold the **[Stop/Set]** button. With the **[Stop/Set]** button pressed:
   - wait roughly 3 seconds until the LED representing the current level of the "**Maintenance notice**" parameter lights up
   - press and hold for at least 5 seconds the **[Open ▲]** and **[Close ▼]** buttons then release them. The LED corresponding to the selected level will emit a series of fast flashes to signal that the manoeuvre counter has been reset
5. release the **[Stop/Set]** button

8 TROUBLESHOOTING... (troubleshooting guide)

8.1 TROUBLESHOOTING

The table below contains useful instructions to resolve any malfunctions or errors that may occur during installation or in case of a fault.

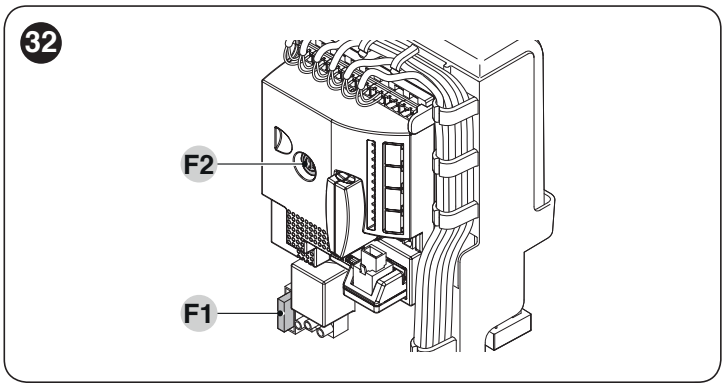

Table 9

TROUBLESHOOTING	
Problems	**Recommended checks**
The radio transmitter does not control the gate and the LED on the transmitter does not light up	Check whether the transmitter batteries are exhausted and replace them if necessary.
The radio transmitter does not control the gate but the LED on the transmitter lights up	Check whether the transmitter has been memorised correctly in the radio receiver.
No manoeuvre starts and the "BlueBUS" LED does not flash	Check that the gearmotor is being powered with the mains voltage Check whether fuses **F1** and **F2** are blown; if they are, identify the cause of the failure then replace the fuses with others having the same current rating and characteristics.
No manoeuvre starts and the warning light is off	Check that the command is actually received. If the command reaches the Step-by-Step input, the corresponding "**SbS**" LED must light up; if instead the radio transmitter is used, the "**BluBus**" LED must emit two quick flashes.
No manoeuvre starts and the warning light flashes a few times	Count the number of flashes and check the corresponding value in "***Table 10***".
The manoeuvre starts but is immediately followed by a reverse run	The selected force value may be too low to move the type of gate. Check whether there are any obstacles and, if necessary, select a higher force.
The manoeuvre is completed correctly but the warning light does not work	Make sure that there is voltage on the warning light's FLASH terminal during the manoeuvre (being intermittent, the voltage value is not significant: roughly 10–30 V⎓); if there is voltage, the problem is due to the lamp, which must be replaced with one having the same characteristics; if there is no voltage, there may have been an overload on the FLASH output. Check that the cable has not short-circuited.
The manoeuvre is completed correctly but the OGI (Open Gate Indicator) does not work	Check the type of function programmed for the OGI output ("***Table 7***"). When the indicator light should be lit, check that there is voltage on the OGI terminal (roughly 24 V⎓); if there is voltage, the problem is due to the indicator light, which must be replaced with one having the same characteristics; if there is no voltage, there may have been an overload on the OGI output. Check that the cable has not short-circuited.

8.2 ANOMALY LOG

The gearmotor allows for displaying any anomalies that occurred in the last 8 manoeuvres, for example, the interruption of a manoeuvre due to the intervention of a photocell or sensitive edge.

To do this:

1. press and hold the **[Stop/Set]** button until LED "**L1**" starts flashing
2. release the **[Stop/Set]** key when the "**L1**" LED starts flashing

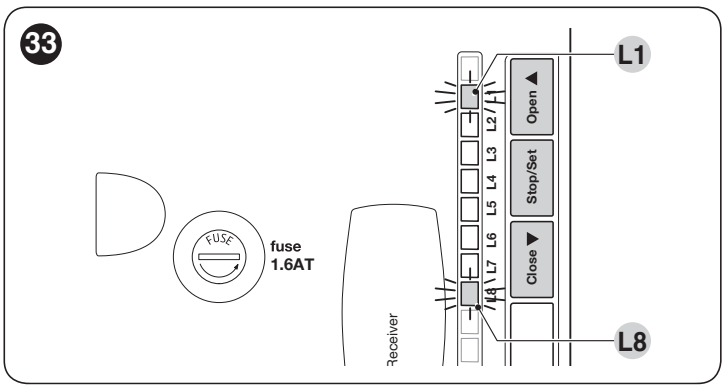

3. press the **[Open ▲]** or **[Close ▼]** button to shift the flashing LED to "**L8**", that is, the "entry LED" for the "**List of anomalies**" parameter
4. press and hold the **[Stop/Set]** button. With the **[Stop/Set]** button pressed:
   - wait roughly 3 seconds, after which the LEDs corresponding to the manoeuvres that had anomalies will light up. LED **L1** indicates the result of the most recent manoeuvre, while LED **L8** indicates the result of the eighth manoeuvre. If the LED is lit, it means that anomalies occurred during the manoeuvre; if the LED is off, the manoeuvre terminated without any anomalies
   - press the **[Open ▲]** or **[Close ▼]** button to select the desired manoeuvre: the corresponding LED will flash the same number of times as those emitted by the warning light following an anomaly (see "***Table 10***")
5. release the **[Stop/Set]** button.

8.3 SIGNALLING THROUGH WARNING LIGHT

During the manoeuvre, the “FLASH” warning light flashes once every second; whenever anomalies occur, shorter flashes are emitted; the flashes are repeated twice with a one-second pause in between.

Table 10

FLASH WARNING LIGHT SIGNALS		
Fast flashes	**Cause**	**ACTION**
1 flash 1-second pause 1 flash	BlueBus system error	At the start of the manoeuvre, the test to verify the devices connected to the BLUEBUS does not provide the same devices memorised during the learning phase. There may be defective devices: check and replace them if necessary; if changes have been made, the learning procedure must be repeated.
2 flashes 1-second pause 2 flashes	Intervention of a photocell	At the start of the manoeuvre, one or more photocells are blocking the movement; check whether there are any obstacles. During the manoeuvre, this is normal if an obstacle is present.
3 flashes 1-second pause 3 flashes	Intervention of the “Motor Force” limiter	The gate encountered more resistance during its movement; verify the cause and increase the motor force if necessary.
4 flashes 1-second pause 4 flashes	Intervention of the STOP input	At the start of the manoeuvre or during the movement, the STOP input intervened; identify the cause.
5 flashes 1-second pause 5 flashes	Error in the internal parameters of the control unit	Wait at least 30 seconds then try giving a command; if the condition persists, it means that there is a serious malfunction and the electronic board must be replaced.
6 flashes 1-second pause 6 flashes	The maximum number of manoeuvres per hour limit has been exceeded	Wait a few minutes until the manoeuvre limiter drops below the maximum limit.
7 flashes 1-second pause 7 flashes	Error in the internal electric circuits	Disconnect all power circuits for a few seconds then try giving a command again; if the condition persists, it means that there is a serious malfunction and the electronic board must be replaced.
8 flashes 1-second pause 8 flashes	A command that prevents other commands from being executed is already present	Check the type of command that is always present; for example, it could be a command from a timer on the “Open” input.
9 flashes 1-second pause 9 flashes	The automation was stopped by a “Stop automation” command	Unlock the automation mechanism by giving the “Unlock automation” command.

8.4 SIGNALS ON THE CONTROL UNIT

The control unit has a series of LEDs, each of which can emit special signals both during regular operation and when an anomaly occurs.

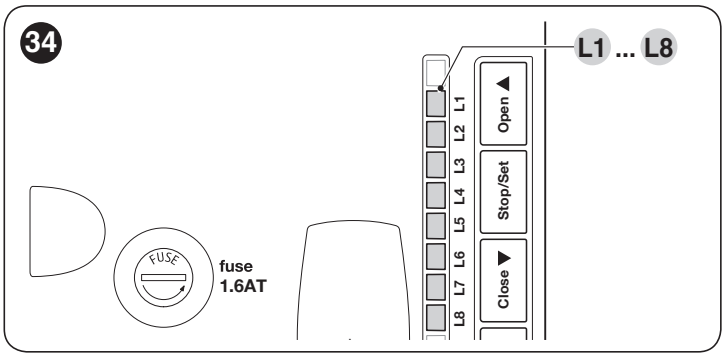

Table 11

TERMINAL LEDS ON THE CONTROL UNIT		
Status	**Meaning**	**Possible solution**
BlueBus LED		
OFF	Anomaly	Check for the presence of power; check that the fuses are not blown; if necessary, identify the cause of the fault then replace them with fuses having the same specifications.
On	Serious anomaly	There is a serious anomaly; try switching off the control unit for a few seconds; if the condition persists, it means that there is a fault and the electronic circuit board must be replaced.
1 flash per second	Everything normal	Normal control unit operation.
2 fast flashes	The status of the inputs has changed	This is normal when there is a change in the status of the STOP or OPEN input, when the photocells activate or when the radio transmitter is used.
A series of flashes separated by a 1-second pause	Various	Refer to that shown in “***Table 10***”.

TERMINAL LEDS ON THE CONTROL UNIT		
Status	**Meaning**	**Possible solution**
STOP LED		
OFF	Intervention of the STOP input	Check the devices connected to the STOP input.
On	Everything normal	STOP input active.
Sbs LED		
OFF	Everything normal	Sbs input not active.
On	Intervention of the Sbs input	This is normal if the device connected to the Sbs input is actually active.
OPEN LED		
OFF	Everything normal	OPEN input not active.
On	Intervention of the OPEN input	This is normal if the device connected to the OPEN input is actually active
CLOSE LED		
OFF	Everything normal	CLOSE input not active.
On	Intervention of the CLOSE input	This is normal if the device connected to the CLOSE input is actually active.
AUX_IN LED		
OFF	Opening of the AUX_IN input contact	Check the devices connected to the AUX_IN input
On	Everything normal	AUX_IN input active

Table 12

LEDS ON THE CONTROL UNIT BUTTONS	
LED 1	**Description**
OFF	During normal operation, this indicates that “Automatic Closing” is disabled.
On	During normal operation, this indicates that “Automatic Closing” is active.
Flashes	Function programming in progress. If it flashes together with “**L2**”, it means that the device learning phase must be carried out (refer to the “ ***Device learning***” paragraph).
LED 2	**Description**
OFF	During normal operation, it signals that the “Close after photo” mode is not active.
On	During normal operation, it signals that the “Close after photo” mode is active.
Flashes	Function programming in progress. If it flashes together with “**L1**”, it means that the device learning phase must be carried out (see the “ ***Device learning***” paragraph)
LED 3	**Description**
OFF	During normal operation, this indicates that “Always Close” is not active.
On	During normal operation, it signals that “Always close” is active.
Flashes	Function programming in progress. If it flashes together with L4, it means that the leaf length learning phase must be carried out (refer to the “ ***Leaf length learning***” paragraph).
LED 4	**Description**
OFF	During normal operation, it signals that the “Stand-by” mode is not active.
On	During normal operation, it signals that the “Stand-by” mode is active.
Flashes	Function programming in progress. If it flashes together with L3, it means that the leaf length learning phase must be carried out (refer to the “ ***Leaf length learning***” paragraph).
LED 5	**Description**
OFF	During normal operation, it indicates that the “Peak” mode is not active.
On	During normal operation, it signals that the “Peak” mode is active.
Flashes	Function programming in progress.
LED 6	**Description**
OFF	During normal operation, it signals that the “Pre-flashing” mode is not active.
On	During normal operation, it signals that the “Pre-flashing” mode is active.
Flashes	Function programming in progress.
LED 7	**Description**
OFF	During normal operation, it signals that the “CLOSE” input triggers a closing manoeuvre.
On	During normal operation, it signals that the “CLOSE” input triggers a partial opening manoeuvre.
Flashes	Function programming in progress.
LED 8	**Description**
OFF	During normal operation, it signals that **SLH400** is configured as master.
On	During normal operation, it signals that **SLH400** is configured as slave.
Flashes	Function programming in progress.

9 FURTHER INFORMATION (Accessories)

9.1 ADDING OR REMOVING DEVICES

Once the automation has been assembled, it is possible to add or remove devices at any time. In particular, various types of devices can be connected to the "**BlueBUS**" and "**STOP**" inputs, as described in the following paragraphs.

After having added or removed devices, these must be learned as described in the "*Learning of other devices*" paragraph.

9.1.1 BlueBUS

BlueBUS is a technique that allows for connecting compatible devices with only two wires which carry the electrical power and the communication signals. All devices are connected in parallel on the same 2 BlueBUS wires and without having to observe the polarities; each device is recognised because it is assigned a univocal address during the installation phase.
The following devices can be connected to the BlueBUS: photocells, safety devices, control buttons, signalling lights, etc. The control unit recognises all the connected devices individually through an appropriate learning phase, and can detect all possible anomalies with absolute precision.
For this reason, whenever a device is connected to or removed from BlueBUS, the learning phase must be carried out on the control unit, as described in the "***Learning of other devices***" paragraph.

9.1.2 STOP input

STOP is the input that causes immediate stoppage of the manoeuvre followed by its brief reversal. Devices with output featuring normally open "NO" and normally closed "NC" contacts, as well as devices with 8.2 kΩ fixed resistor output, such as sensitive edges, can be connected to this input.
As with the BlueBUS, the control unit recognises the type of device connected to the STOP input during the learning phase (see the "***Learning of other devices***" paragraph); subsequently the control unit gives a STOP command when it detects a variation with respect to the recognised status.
Multiple devices, even of different types, can be connected to the STOP input if suitable arrangements are made:
- Any number of NO devices can be connected to each other in parallel.
- Any number of NC devices can be connected to each other in series.
- Two devices with 8.2 kΩ fixed resistor output can be connected in parallel; if there are more than 2 devices then they must all be connected in cascade, with a single 8.2 kΩ terminating resistor.
- It is possible to combine two NO and NC contacts by placing them in parallel, while also mounting a 8.2 kΩ resistor in series with the NC contact (this also allows for combining 3 devices: NA, NC and 8.2 kΩ).

If the STOP input is used to connect devices with safety functions, only those devices with 8.2 kΩ fixed resistor guarantee Category 3 safety against faults in accordance with the EN 13849-1 standard.

9.1.3 Photocells

To allow the control unit to recognise the devices connected through the "BlueBUS" system, these devices must be addressed.
This operation can be carried out by correctly positioning the electrical jumper present in each device (also refer to the instruction manual of each device). Shown below is an addressing diagram for photocells, based on their type.

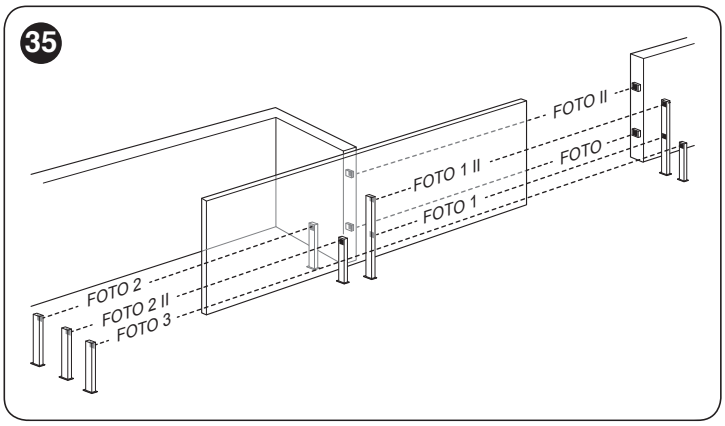

Table 13

PHOTOCELL ADDRESSES	
Photocell	**Position of the jumpers**
FOTO (PHOTO) **External photocell h = 50 activated during the closing phase (stops and reverses the gate's movement)**	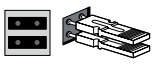
FOTO II (PHOTO II) **External photocell h = 100 activated during the closing phase (stops and reverses the gate's movement)**	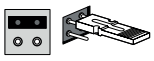
FOTO 1 (PHOTO 1) **Internal photocell h = 50 activated during the closing phase (stops and reverses the gate's movement)**	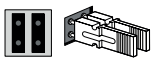
FOTO 1 II (PHOTO 1 II) **Internal photocell h = 100 activated during the closing phase (stops and reverses the gate's movement)**	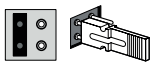
FOTO 2 (PHOTO 2) **External photocell activated during the opening phase**	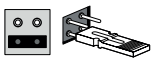
FOTO 2 II (PHOTO 2 II) **Internal photocell activated during the opening phase**	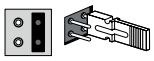
FOTO 3 (PHOTO 3) **Single photocell covering the entire automation**	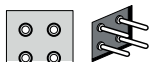

In order to jointly install PHOTO 3 and PHOTO II, the position of the elements making up the photocell (TX - RX) must comply with the warning indicated in the instruction manual of the photocells.

At the end of the installation procedure, or after photocells or other devices have been removed, it is necessary to complete the learning procedure (see the "*Device learning*" paragraph).

9.1.4 FT210B photosensor

The FT210B photosensor combines in a single device a force limiting system (type C, in accordance with the EN12453 standard) and a presence sensor that detects obstacles on the line of sight between the TX transmitter and RX receiver (type D, in accordance with the EN12453 standard). In the FT210B photosensor, the signals regarding the status of the sensitive edge are sent through the photocell range, integrating the 2 systems in a single device. The transmitting element located on the moving leaf is battery-powered, which eliminates visually unpleasant connection systems; special circuits reduce battery consumption, ensuring up to 15 years' life (see estimation details in the product's instructions).
A single FT210B device combined with a sensitive edge (TCB65, for example) allows for attaining the level of safety of the "primary edge" required by the EN12453 standard for all "types of use" and "types of activation".

The FT210B photosensor combined with the "resistive" sensitive edges (8.2 kΩ) is safe against faults (category 3 pursuant to the EN 13849-1 standard). It is equipped with a special anti-collision circuit to prevent interference with other detectors, even not synchronised, and allows for adding other photocells; for example, in case of transit of heavy vehicles, where a second photocell is normally positioned 1 m above the ground.

Consult the FT210B instruction manual for further information on the connection and addressing methods.

9.1.5 Gearmotor in SLAVE mode

The motor can function in SLAVE mode by suitably programming and connecting it; this operating mode is used to automate two opposite leaves that must move in a synchronised manner. In this mode, a motor functions as MASTER, in other words, it commands the manoeuvres, while the second motor functions as SLAVE, executing the commands sent by the MASTER (all the motors are MASTER by default).
The connection between MASTER and SLAVE is made via BlueBUS.

In this case, the polarity of the connections between the two motors must be observed, as illustrated in "*Figure 36*" (the other devices will continue not having polarity).

It is not important which motor functions as MASTER or SLAVE; the choice must take into account the ease of the connections and the fact that the "Step-by-Step" command of the SLAVE device allows the full opening of the SLAVE leaf only.

Perform the following operations to install two motors in MASTER and SLAVE mode:
1. install the two motors
2. connect the two motors as shown in "*Figure 36*"

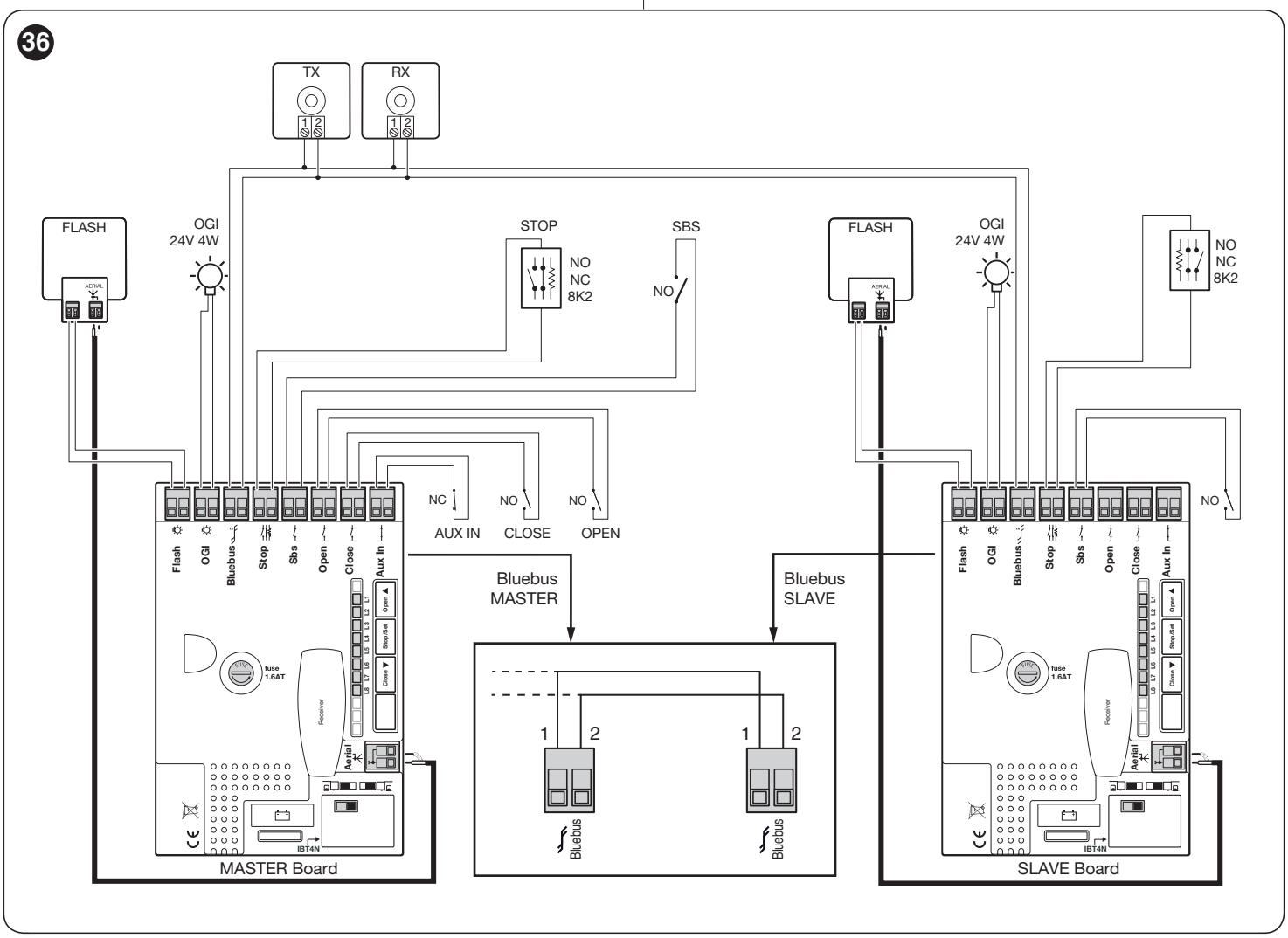

3. select the opening direction of the two motors, as shown in the figure (also refer to the "***Choosing the direction***" paragraph)

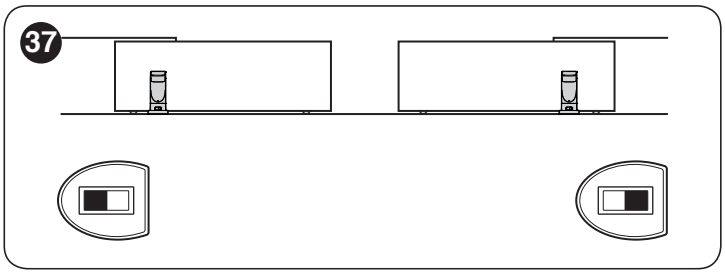

4. power the two motors
5. in the SLAVE motor, programme the "**SLAVE mode**" function (see "***Table 6***")
6. perform the procedure for acquiring devices on the SLAVE motor (see the "***Device learning***" paragraph)
7. perform the procedure for acquiring devices on the MASTER motor (see the "***Device learning***" paragraph)
8. perform the procedure for acquiring the length of the leaves on the MASTER motor (see the "***Leaf length learning***" paragraph).

In connecting the two motors in SLAVE-MASTER mode, verify that:
- all devices must be connected to the MASTER motor (as shown in "***Figure 36***"), including the radio receiver
- when using back-up batteries, each motor must have its own battery

Once a motor has been configured as SLAVE, it nonetheless maintains some functions (listed below) separate from the MASTER motor.
Level 1 functions (ON-OFF functions)
- Stand-by
- Peak
- Slave mode

Level 2 functions (adjustable parameters)
- OGI output
- Motor force
- Error log

On the SLAVE motor it is possible to connect:
- an own warning light (Flash)
- an own Open Gate Indicator (OGI)
- an own sensitive edge (Stop)
- an own command device (Sbs) that controls the full opening of the Slave leaf only.
- In the Slave, the Open, Close and Aux_In inputs are not used.

In the SLAVE, the "Open", "Close" and "Aux_In" inputs are not used.

9.1.6 Learning of other devices

Normally the learning of devices connected to "**BlueBUS**" and the "**STOP**" input takes place during the installation stage; however, if new devices are added or old ones removed, the learning process can be redone.

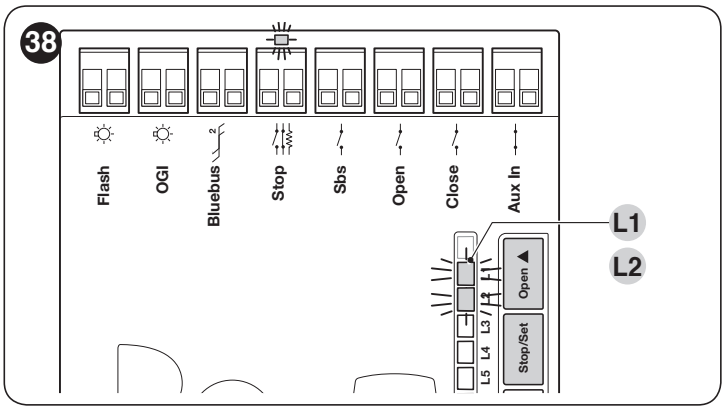

To do this:
1. simultaneously press and hold the **[Open ▲]** and **[Stop/Set]** buttons
2. release the buttons when LEDs "**L1**" and "**L2**" start flashing rapidly (after roughly 3 seconds)
3. wait a few seconds until the control unit has completed the device learning phase
4. at the end of this phase, the "**Stop**" LED must be lit, LEDs "**L1**" and "**L2**" must switch off, while LEDs "**L1…L8**" will switch on depending on the status of the ON-OFF functions they represent.

After having added or removed devices, the automation test must be carried out again as specified in the "*Testing*" paragraph.

9.1.7 Connecting an SM-type radio receiver

The control unit has a slot for mounting radio receivers with SM connector (optional accessories) belonging to the SMXI, OXI, etc. families, which can be used to remotely control the control unit through transmitters that intervene on the unit's inputs.
To install a receiver ("***Figure 39***"):
1. insert the receiver (**A**) in the appropriate slot (**B**) on the control unit's electronic board.

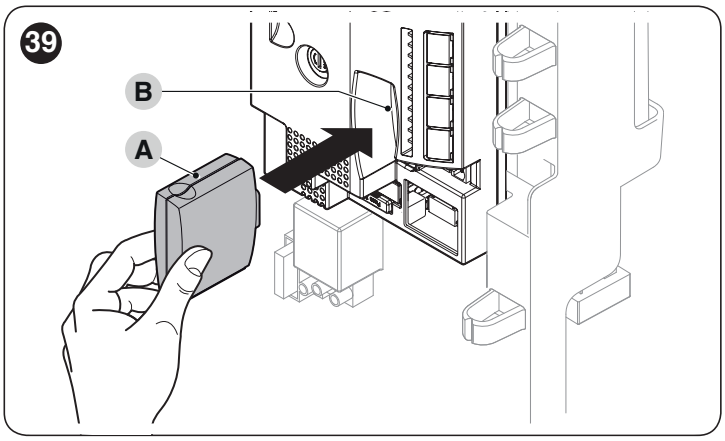

The association between the radio receiver output and the command executed by the motor is shown in "***Table 14***":

Table 14

SMXI / SMXIS OR OXI / OXIFM / OXIT / OXITFM IN MODE 1 OR MODE 2	
Receiver output	**Command**
Output No. 1	"Step-by-Step"
Output No. 2	"Partial opening"
Output No. 3	"Open"
Output No. 4	"Close"

If the OXI radio receiver used in “EXTENDED MODE” is installed, it may send the commands shown in “***Table 15***“.

Table 15

OXI / OXIFM /OXIT / OXITFM IN MODE 2 EXTENDED		
No.	**Command**	**Description**
1	**Step-by-Step**	“SbS” (Step-by-Step) command
2	**Partial opening 1**	“Partial opening 1” command
3	**Open**	“Open” command
4	**Close**	“Close” command
5	**Stop**	Stops the manoeuvre
6	**Condominium Step-by-Step**	Command in condominium mode
7	**High priority Step-by-Step**	Commands also with the automation locked or the commands enabled
8	**Partial open 2**	Partial opening (the M2 gate leaf opens to 1/2 the full length)
9	**Partial open 3**	Partial open (the two gate leaves open to 1/2 the full length)
10	**Opens and locks the automation**	Triggers an opening manoeuvre and, once this terminates, locks the automation; the control unit will not accept any command other than “High priority Step-by-Step” and automation “Unlock”, or (only from Oview) the following commands: “Unlock and close” and “Unlock and open”
11	**Closes and locks the automation**	Triggers a closing manoeuvre and, once this terminates, locks the automation; the control unit will not accept any command other than “High priority Step-by-Step” and automation “Unlock”, or (only from Oview) the following commands: “Unlock and close” and “Unlock and open”
12	**Lock automation**	Triggers the stoppage of the manoeuvre and locks the automation; the control unit will not accept any command other than “High priority Step-by-Step” and automation “Unlock”, or (only from Oview) the following commands: “Unlock and close” and “Unlock and open”
13	**Release automation**	Triggers unlocking of the automation and restores normal operation
14	**On Timer Courtesy light**	The courtesy light output switches on with timer-based switching off
15	**On-Off Courtesy light**	The courtesy light output switches on and off in Step-by-step mode

For further information, consult the specific manual of the receiver.

9.1.8 Connecting and installing the back-up battery

The electrical connection of the battery to the control unit must be made only after completing all the installation and programming stages, as the battery is an emergency power supply.

To install and connect the battery:

1. remove the plastic protection (**A**) with the aid of a screwdriver

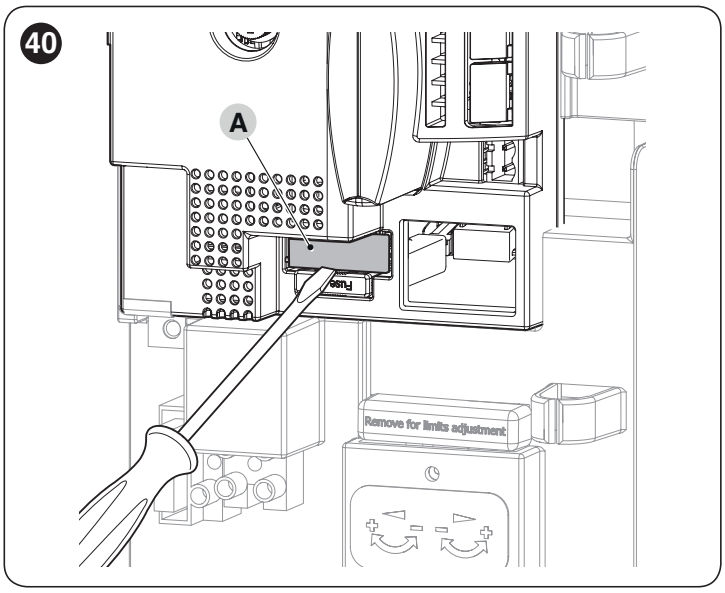

2. slide the battery (**B**) into its housing
3. insert the relative connector (**C**) on the control unit.

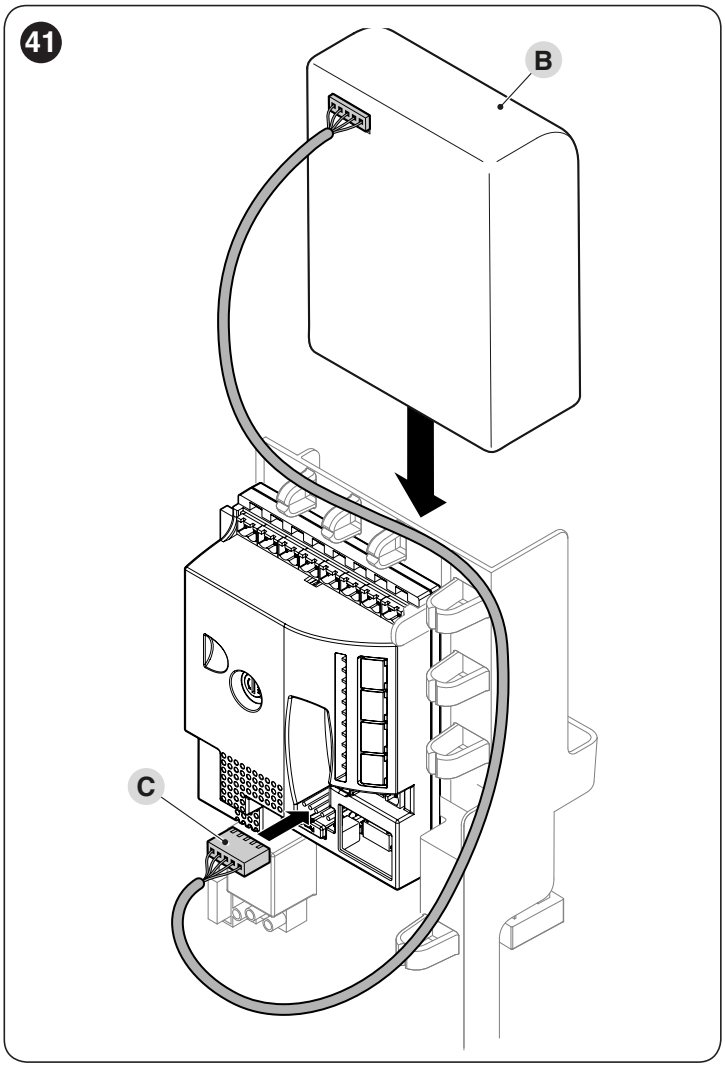

9.1.9 Connecting the Oview programmer

The control unit has a BusT4 connector to which the "**Oview**" programmer can be connected, through the IBT4N interface. The programmer allows for fully and rapidly managing the installation, maintenance and diagnosis of the entire automation.
To access the connector, proceed as shown in the figure and connect the connector to its relevant slot.

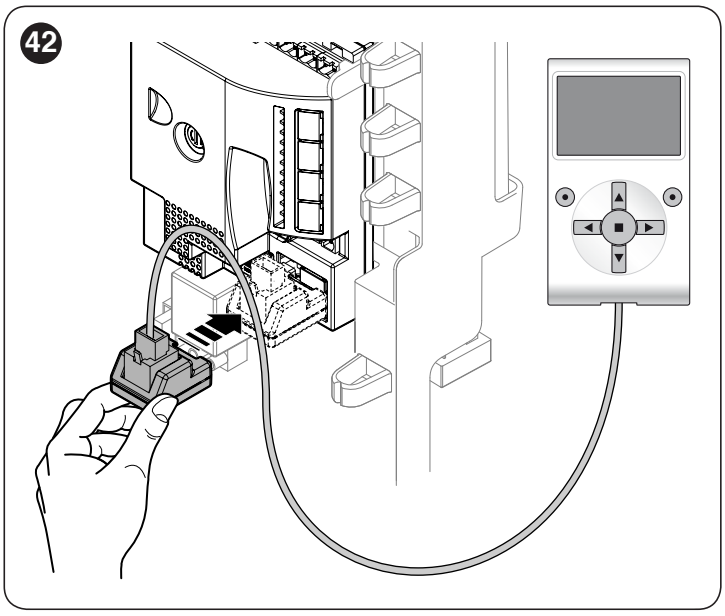

The Oview may be connected to multiple control units simultaneously (up to 5 with no particular precautions, up to 60 with the warnings stated) and may be left connected to the control unit during normal operation of the automation. In this case, it can be used to directly send commands to the control unit through the specific "user" menu.
It is also possible to update the firmware. If the control unit has a radio receiver belonging to the OXI family, the "**Oview**" can be used to access the transmitter parameters memorised in the receiver.
For more detailed information, consult the respective instruction manual and the "Opera system book" manual.

9.1.10 Connecting the Solemyo solar energy system

When the automation is powered by the "Solemyo" system, IT MUST NOT BE POWERED by the electricity grid at the same time.

To connect the "**Solemyo**" system:
1. remove the plastic protection (**A**) with the aid of a screwdriver
2. insert the relative connector (**B**) on the control unit.

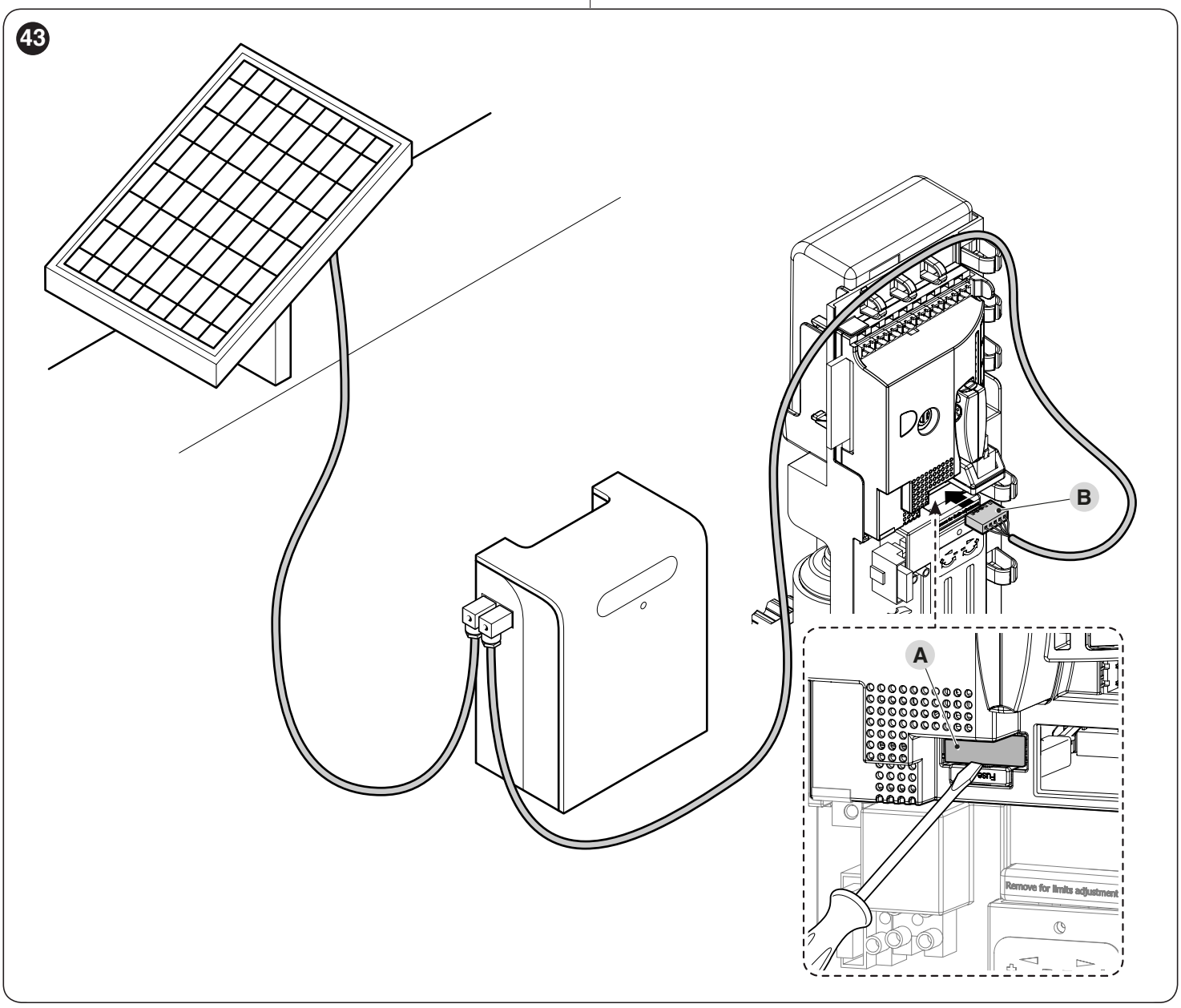

10 PRODUCT MAINTENANCE

The automation must be subjected to regular maintenance to keep its safety level constant and guarantee long-lasting operation; to this aim, **Slight** has a manoeuvre counter and maintenance warning system; refer to the "***"Maintenance notice" function***" paragraph.

Maintenance must be carried out strictly in compliance with the safety provisions provided in this manual and in accordance with the laws and regulations in force.

To carry out maintenance on the gearmotor:

1. Schedule maintenance interventions within maximum 6 months or after maximum 20.000 manoeuvres from the previous maintenance intervention
2. disconnect all power supplies, including any back-up batteries
3. check for any deterioration in the materials making up the automation, with special emphasis on erosion or oxidation of the structural parts; replace any parts that are not to standard
4. check the state of wear of moving parts: pinion, rack and all gate leaf components; replace any worn parts
5. connect the power supplies again and run all the tests and checks described in the "***Testing***" paragraph.

11 PRODUCT DISPOSAL

This product is an integral part of the operator and must therefore be disposed of with it.

As with the installation, only qualified personnel must dismantle the product at the end of its life.
This product is composed of different types of materials. Some of these materials can be recycled; others must be disposed of. Please enquire about the recycling or disposal systems in place in your local area for this type of product.

WARNING

Some parts of the product may contain polluting or dangerous substances. If not disposed of correctly, these substances may have a damaging effect on the environment and human health.

As indicated by the symbol shown here, this product must not been disposed of with household waste. Separate the waste for disposal and recycling, following the methods stipulated by local regulations, or return the product to the seller when purchasing a new product.

WARNING

Local regulations may impose heavy penalties if this product is not disposed of in compliance with the law.

12 TECHNICAL SPECIFICATIONS

All technical specifications stated in this section refer to an ambient temperature of 20°C (± 5°C). Nice S.p.A. reserves the right to apply modifications to the product at any time when deemed necessary, without altering its functions and intended use.

Table 16

TECHNICAL SPECIFICATIONS	
Description	**Technical specification**
Product type	Electro-mechanical gearmotor for the automatic movement of sliding gates for residential use, inclusive of electronic control unit
Pinion	Z: 15; Module: 4; Pitch: 12.6 mm; Primitive diameter: 60 mm
Peak torque [corresponding to the ability to develop a force capable of moving the leaf]	12 Nm; corresponding to the ability to move a leaf with dynamic friction of up to 400N
Nominal torque [corresponding to the ability to develop a force capable of keeping the leaf moving]	6 Nm; corresponding to the ability to keep a leaf moving with dynamic friction of up to 200N
Nominal torque speed	0,18 m/s
No-load speed (the control unit allow for programming 6 speeds roughly equal to: 100, 85, 70, 55, 45, 30%)	0,34 m/s
Maximum frequency of operating cycles (at nominal torque)	35 cycles/hour (the control unit limits the cycles to the maximum specified in Tables "***Table 2***" and "***Table 3***")
Maximum continuous operating time (at nominal torque)	10 minutes
Application limits	In general, **SLH400** is able to automate gates weighing up to 400 kg or up to 7 metres long, according to the limits shown in "***Table 1***" and "***Table 2***".
Durability	Estimated between 20,000 and 180,000 cycles, depending on the conditions shown in "***Table 3***"
Power supply Slight	230V~ (+10% -15%) 50/60Hz
Maximum absorbed power at peak	330W
Insulation class	1 (a safety earthing system is required)
Emergency power supply	With optional accessory PS124
Warning light output	For 2 ELDC LED warning lights or maximum 2 x 12 V 21 W lamps
OGI output	For one 24 V maximum 4 W lamp (the output voltage may vary between –30 and +50% and can also control small relays)
BLUEBUS output	One output with maximum load of 15 BlueBus units
STOP input	For normally closed or normally open contacts or for 8.2 kΩ fixed resistor contacts with self-learning (any variation from the memorised status triggers the STOP command)
Sbs input	For normally open contacts (closing of the contact triggers the STEP-BY-STEP command)
OPEN input	For normally open contacts (closing of the contact triggers the "OPEN" command)
CLOSE input	For normally open contacts (closing of the contact triggers the CLOSE command)
AUX_IN input	For normally closed contacts (opening the contact triggers a STOP command)
Radio connector	SM connector for SMXI and SMXIS receivers
Radio ANTENNA input	52 Ω for RG58-type cable or similar
Programmable functions	8 ON-OFF functions and 8 adjustable functions (see "***Table 6***" and "***Table 7***")
Self-learning functions	Self-learning of the devices connected to the BlueBus output Self-learning of the type of "STOP" device (Normally Open, Normally Closed contact or 8.2 kΩ resistor) Self-learning of the gate length and calculation of the deceleration and partial opening points
Operating temperature	-20°C ÷ 55°C
Use in highly acid, saline or potentially explosive atmosphere	No
Protection rating	IP 44 on the finished product if installed according to proper installation criteria
Dimensions and weight	131x135xh405; 6,5 kg

YAYDOOR www.yaydoor.com

EU Declaration of Conformity

and declaration of incorporation of "partly completed machinery"

Note - The contents of this declaration correspond to declarations in the official document deposited at the registered offices of Nice S.p.a. and in particular to the last revision available before printing this manual. The text herein has been re-edited for editorial purposes. A copy of the original declaration can be requested from Nice S.p.a. (TV) I.

Number: 473/SLH400 **Rev:** 5 **Language:** EN

Manufacturer's Name: Nice s.p.a.
Address: Via Callalta 1, 31046 Oderzo (TV) Italy
Authorized Person to constitute technical documentation: Nice s.p.a.
Type of product: Electromechanical gear motor with incorporated control unit
Model/Type: SLH400
Accessories: Refer to the catalog

The undersigned Roberto Griffa, in the role of Chief Executive Officer, declares under his sole responsibility that the product described above complies with the provisions laid down in the following directives:

• Directive 2014/30/EU (EMC), according to the following harmonized standards: EN 61000-6-2:2005, EN 61000-6-3:2007+A1:2011

The product also complies with the following directives according to the requirements envisaged for "partly completed machinery" (Annex II, part 1, section B):

• Directive 2006/42/EC of the EUROPEAN PARLIAMENT AND COUNCIL of 17 May 2006 related to machinery and amending the Directive 95/16/EC (recast).

It is hereby stated that the relevant technical documentation has been compiled in accordance with annex VII B of Directive 2006/42/EC and that the following essential requirements have been fulfilled: 1.1.1 - 1.1.2 - 1.1.3 - 1.2.1 - 1.2.6 - 1.5.1 - 1.5.2 - 1.5.5 - 1.5.6 - 1.5.7- 1.5.8 - 1.5.10 - 1.5.11
The manufacturer undertakes to transmit to the national authorities, in response to a reasoned request, the relevant information on the " partly completed machinery ", while maintaining full rights to the related intellectual property.
Should the " partly completed machinery" be put into service in a European country with an official language other than that used in this declaration, the importer is obliged to arrange for the relative translation to accompany this declaration.
The "partly completed machinery" must not be used until the final machine in which it is incorporated is in turn declared as compliant, if applicable, with the provisions of directive 2006/42/EC.

The product also complies with the following standards:
EN 60335-1:2012+A11:2014, EN 62233:2008, EN 60335-2-103:2015

Ing. Roberto Griffa
(Chief Executive Officer)

Oderzo, 16/05/2018

YAYDOOR www.yaydoor.com

NOTES

INSTRUCTIONS AND WARNINGS FOR THE USER

Before using the automation for the first time, ask the installer to explain the origin of any residual risks and take a few minutes to read this instruction manual and warnings for the user given to you by the installer. Store the manual for future reference and hand it to the new owner when transferring the automation.

WARNING!

Your automation is a machine that faithfully executes commands imparted by the user. Negligence and improper use may lead to dangerous situations:

- do not manoeuvre the gate if there are people, animals or objects within its range of operation
- it is strictly forbidden to touch parts of the automation while the gate or door is moving
- the photocells are not a safety device but only an auxiliary aid to safety. They are built using highly reliable technology but, in extreme conditions, may malfunction or even become defective. In certain cases, the defect may not be clearly evident. For these reasons, it is important to follow all the instructions given in this manual when using the automation
- periodically check that the photocells work properly.

IT IS STRICTLY FORBIDDEN to transit through the gate while it is closing! It is only possible to transit through the gate when it is fully open and the leaves are at a standstill.

CHILDREN

An automation system guarantees a high degree of safety. With its detection systems, it can control and guarantee the gate's movement in the presence of people or objects. It is nonetheless advisable to forbid children from playing near the automation and not to leave remote controls near them to prevent any unwanted activation of the system. The automation is not a toy!

The product is not intended for use by persons, including children, with limited physical, sensory or mental capacities, or who lack experience or knowledge, unless supervised or trained in the use of the product by a person responsible for their safety.

Anomalies: if the automation shows any signs of anomalous behaviour, disconnect the power supply to the system and manually unlock the motor (see instructions at the end of the chapter) to manoeuvre the gate manually. Do not attempt any repairs personally but contact your trusted installer.

Do not modify the system or the programming and adjustment parameters of the control unit: your installer is exclusively responsible for these operations.

Failure or lack of power supply: while waiting for the installer to intervene or the electricity to be restored, if the system is not equipped with back-up batteries, the automation can nonetheless be used by manually unlocking the motor (consult the instructions at the end of the chapter) and moving the gate leaf manually.

Safety devices out of order: the automation can also be used when one or more safety devices are defective or out of order. The gate can be operated in the "**Person present**" mode in the following way:

1. send a command to operate the gate using a transmitter or key selector, etc. If everything works normally, the gate will move regularly, otherwise the warning light will flash a few times and the manoeuvre will not start (the number of flashes depends on the reason for which the manoeuvre cannot start)
2. in this case, within 3 seconds press the control again and hold it down
3. after roughly 2 seconds, the gate will complete the requested manoeuvre in "**Hold-to-run**" mode, in other words, it will continue to move so long as the control is held down.

If the safety devices are out of order, have the system repaired as soon as possible by a qualified technician.

The test, periodic maintenance and any repairs must be documented by the person carrying out the work and the documents must be stored by the owner of the automation. The only interventions the user may carry out periodically include cleaning of the photocell glass components (use a soft and slightly damp cloth) and removing any leaves or stones that may obstruct the automation.

Before carrying out any maintenance operations, the user of the automation must manually unlock the motor to prevent anyone from accidentally triggering the gate's movement (consult the instructions at the end of the chapter).

Maintenance: in order to ensure constant levels of safety and the longest useful life for the automation, routine maintenance must be carried out (at least every 6 months).

Only qualified personnel is authorised to carry out checks, maintenance operations and repairs.

Disposal: at the end of its useful life, the automation must be dismantled by qualified personnel and the materials must be recycled or disposed of in compliance with the local regulations in force.

Replacing the remote control battery: if your remote control appears to be working poorly after some time, or stops working altogether, it may simply depend on flat batteries (depending on how much the device is used, the batteries may last from several months to over a year). You will notice this by the fact that the indicator light signalling the transmission fails to light up, is weak or lights up only for a short time. Before contacting the installer, try replacing the battery with that of another transmitter that works properly: if the anomaly is resolved, simply replace the flat battery with one of the same type.

Unlocking and manual movement

The gate can only be unlocked once the leaf has come to a standstill.

1. insert the key (**A**) and turn it clockwise by 90°

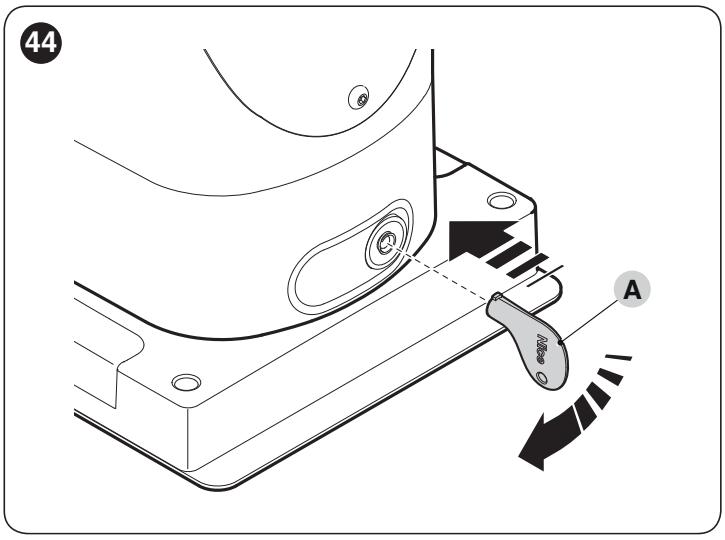

2. move the gate leaf manually.

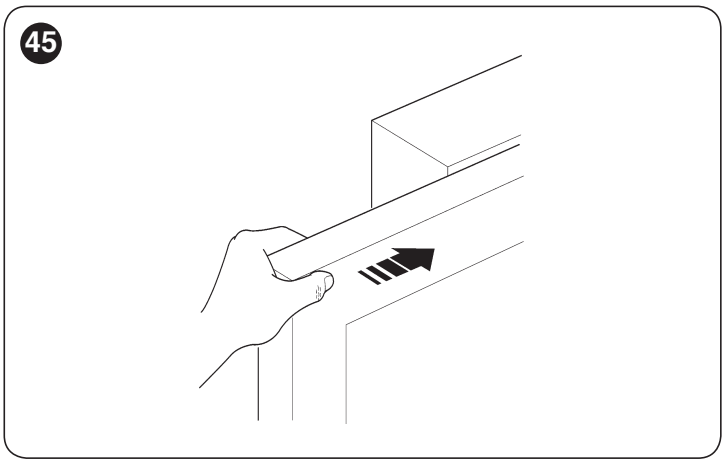

NOTES

NOTES

NOTES

IDV0635A01EN_31-01-2019

Nice SpA
Via Callalta, 1
31046 Oderzo TV Italy
info@niceforyou.com

www.niceforyou.com