Robo

ROBO600

For sliding gates

EN - Instructions and warnings for installation

Nice

CONTENTS

1 GENERAL WARNINGS: SAFETY - INSTALLATION (instructions translated from Italian) 2

2 PRODUCT DESCRIPTION AND INTENDED USE 3

3APPLICATION LIMITS 3

4 ELECTRICAL CONNECTIONS 10

4.1 - Types of electrical cables. 10

4.2 - Electrical cable connections 10

5 STARTING THE AUTOMATION AND CHECKING THE CONNECTIONS 12

5.1 - Hooking the automation up to the mains 12

5.2 - Learning the devices 13

6 TESTING AND COMMISSIONING. 14

6.1 - Testing 14

6.2 - Commissioning 14

7 PROGRAMMING 15

7.2 - Programmable functions 16

7.3 - Integrated radio receiver 18

8 FURTHER DETAILS 22

8.1 - Adding or removing devices 22

8.2 - Power for external devices 23

8.3 - Oview programmer connection 23

8.4 - Total deletion of the memory 23

8.5 - Special functions. 23

9 DIAGNOSTICS 24

9.1 - Control unit signals 24

10 TROUBLESHOOTING GUIDE 25

11 DISPOSAL OF THE PRODUCT 25

12 MAINTENANCE 26

13 TECHNICAL SPECIFICATIONS. 26

14 CONFORMITY 27

INSTRUCTIONS AND WARNINGS FOR USE 28

GENERAL WARNINGS: SAFETY - INSTALLATION (instructions translated from Italian)

⚠ **These warnings are copies straight from the Regulations and as far as possible applicable to the product in question.**

ATTENTION **Important safety instructions. Follow all instructions as improper installation may cause serious damage**

ATTENTION **Important safety instructions. It is important for you to comply with these instructions for your own and other people's safety. Keep these instructions**

- Before commencing the installation, check the "Technical characteristics" (in this manual), in particular whether this product is suitable for automating your guided part. If it is not suitable, DO NOT continue with the installation
- The product cannot be used before it has been commissioned as specified in the chapter on "Testing and commissioning"

ATTENTION **According to the most recent European legislation, the implementation of an automation system must comply with the harmonised standards provided by the Machinery Directive in force, which enables declaration of the presumed conformity of the automation. Taking this into account, all operations regarding connection to the electricity grid, as well as product testing, commissioning and maintenance, must be performed exclusively by a qualified and skilled technician!**

- Before proceeding with the installation of the product, check that all the materials are in good working order and suited to the intended applications
- This product is not intended to be used by persons (including children) whose physical, sensory or mental capacities are reduced, or who lack the necessary experience or skill
- Children must not play with the appliance
- Do not allow children to play with the fixed control devices of the product. Keep the remote controls away from children.

ATTENTION In order to avoid any danger from inadvertent resetting of the thermal cut-off device, this appliance must not be powered through an external switching device, such as a timer, or connected to a supply that is regularly powered or switched off by the circuit

- Provide a disconnection device (not supplied) in the plant's power supply grid, with a contact opening distance permitting complete disconnection under the conditions dictated by overvoltage category III
- Handle the product with care during installation, taking care to avoid crushing, denting or dropping it, or allowing contact with liquids of any kind. Keep the product away from sources of heat and naked flames. Failure to observe the above can damage the product, and increase the risk of danger or malfunction. Should this happen, stop installation immediately and contact Customer Service
- The manufacturer assumes no liability for damage to property, items or persons resulting from non-compliance with the assembly instructions. In such cases the warranty for material defects is excluded
- The weighted sound pressure level of the emission A is lower than 70 dB(A)
- Cleaning and maintenance reserved for the user must not be carried out by children
- Before working on the system (maintenance, cleaning), always disconnect the product from the mains power supply
- Check the system periodically, in particular all cables, springs and supports to detect possible imbalances, signs of wear or damage. Do not use if repairs or adjustments are necessary, since installation failure or an incorrectly balanced door may cause injury
- The packing materials of the product must be disposed of in compliance with local regulations
- When operating a biased-off switch, make sure that other persons are kept away
- When operating the gate, keep an eye on the automated mechanism and keep all bystanders at a safe distance until the movement has been completed
- Do not operate the product if anyone is working nearby; disconnect its power supply before permitting such work to be done

INSTALLATION WARNINGS

- Prior to installing the drive motor, check that all mechanical components are in good working order and properly balanced, and that the automation moves correctly
- If the gate or door being automated has a pedestrian gate, then the system must include a control device that will inhibit the operation of the motor when the pedestrian gate is open
- Make sure that the control devices are kept far from moving parts but nonetheless in a visible position.
  Unless a selector is used, the control devices must be installed at a height of at least 1.5 m and must not be accessible
- That windows, having a gap exceeding 200 mm when open, are to be closed using a biased-off switch if the opening movement is controlled by a fire-sensing system
- Ensure that entrapment between the driven part and the surrounding fixed parts due to the opening movement of the driven part is avoided
- Permanently fix the label concerning the manual release adjacent to its actuating member
- After installing the drive motor, make sure that the mechanism, protective system and all manual manoeuvres operate properly

1 PRODUCT DESCRIPTION AND INTENDED USE

ROBO is an electromechanical gearmotor intended for automating residential sliding gates: it is equipped with an electronic control unit with integral 433.92 MHz radio receiver with O-CODE coding.

This product complies with the criteria set forth in the "Standby" regulation. The product enters Standby Mode |v|0|vv| minutes (configurable) after the completion of a successfully executed operation.

⚠ CAUTION! – All uses other than the intended use described and use in environmental conditions other than those described in this manual should be considered improper and forbidden!

The essential characteristics of the ROBO gearmotor are described in Table 1.

Table 1 – Essential characteristics

	ROBO600
Gate limit (m)	8
Weight limit (kg)	600
Power (V~)	230
Nominal power (W)	300
Peak thrust (Nm)	18
corresponding to force (N)	600
Rated torque (Nm)	9
corresponding to force (N)	300
Work cycle (cycles / hour)	20

Notes: 1 kg = 9.81N (example: 600N = 61 kg)

2 APPLICATION LIMITS

The effective suitability of ROBO to automate a particular sliding gate depends on the friction as well as other correlated factors, such as ice, that could interfere with the movement of the gate.
Measure the force required to move the gate through its entire stroke and check that this does not exceed 25% of the 'maximum force' (chapter 13 - technical specifications): this leaves a suitable margin for unfavourable climatic conditions which can increase friction.

Table 2 – Application limits

	ROBO600	
Gate width (m)	**max No. of cycles / hour**	**max No. of consecutive cycles**
Up to 4	40	20
4 ÷ 6	25	13
6 ÷ 8	20	10
8 ÷ 10	-	-
10 ÷ 12	-	-

⚠ Caution! Any other use or use with dimensions greater than specified is non-conforming. Nice declines all liability for damage and injury resulting for non-conforming use.

3 INSTALLATION

⚠ Important! Before installing the product, refer to chapters 2 and 13 (technical specifications).

Fig. 1 shows the contents of the package: check that everything is present and correct.

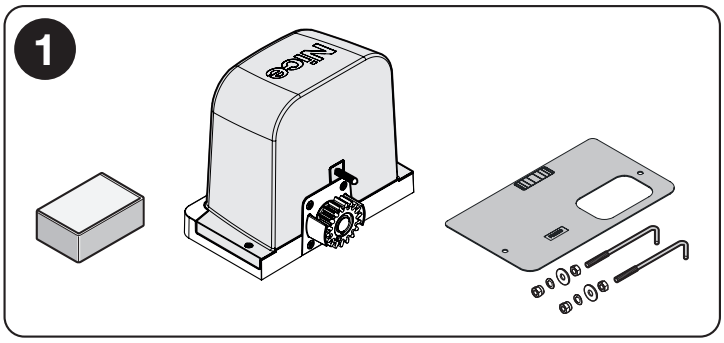

Fig. 2 shows the location of the components of a typical installation using Nice accessories:

a - ROBO gearmotor
b - photocells
c - posts for photocells
d - Key switch / digital keypad
e - flasher
f - rack

For the type of electrical cables (Ⓐ ÷ Ⓕ) refer to Table 3 under paragraph “4.1 - Types of electrical cables”.

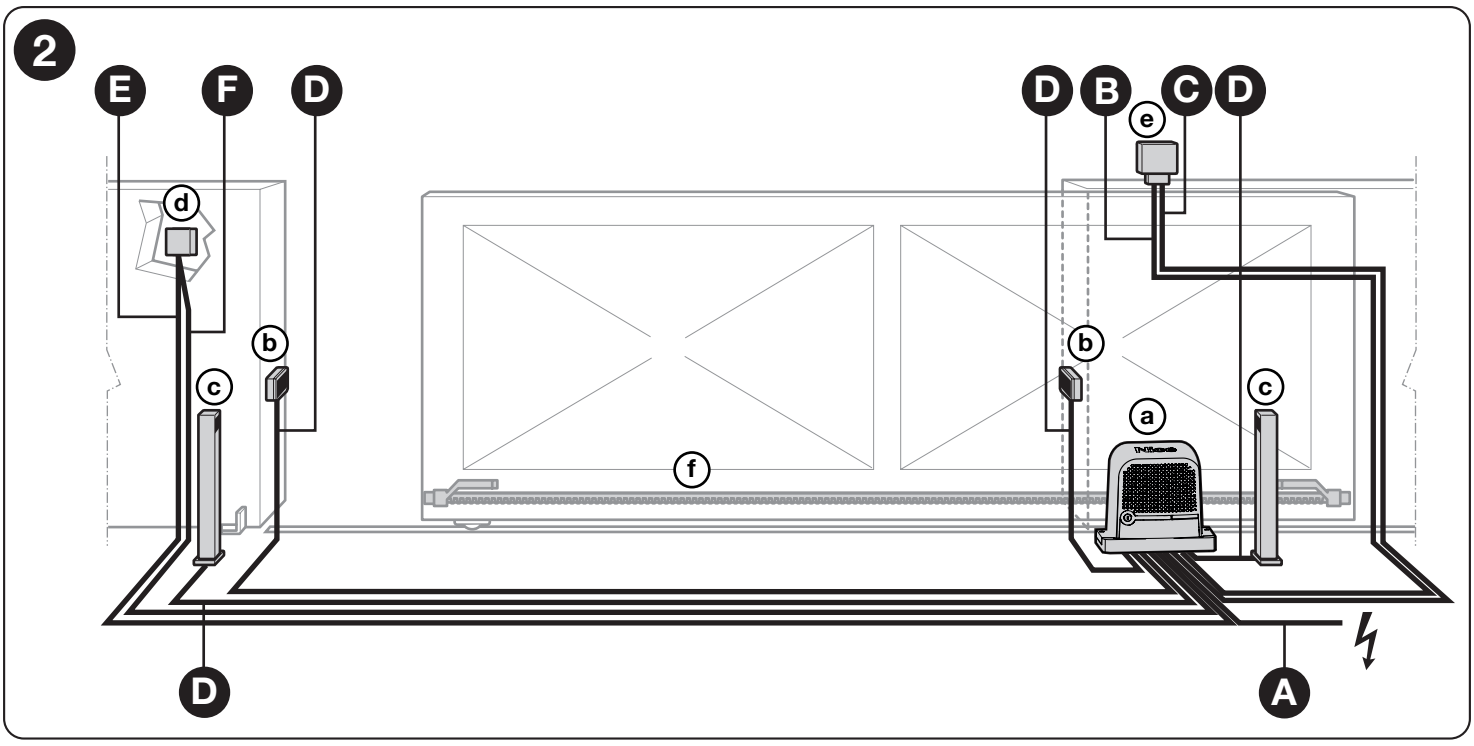

Before installing the system, check the gearmotor’s clearance (fig. 3) and installation dimensions (fig. 4):

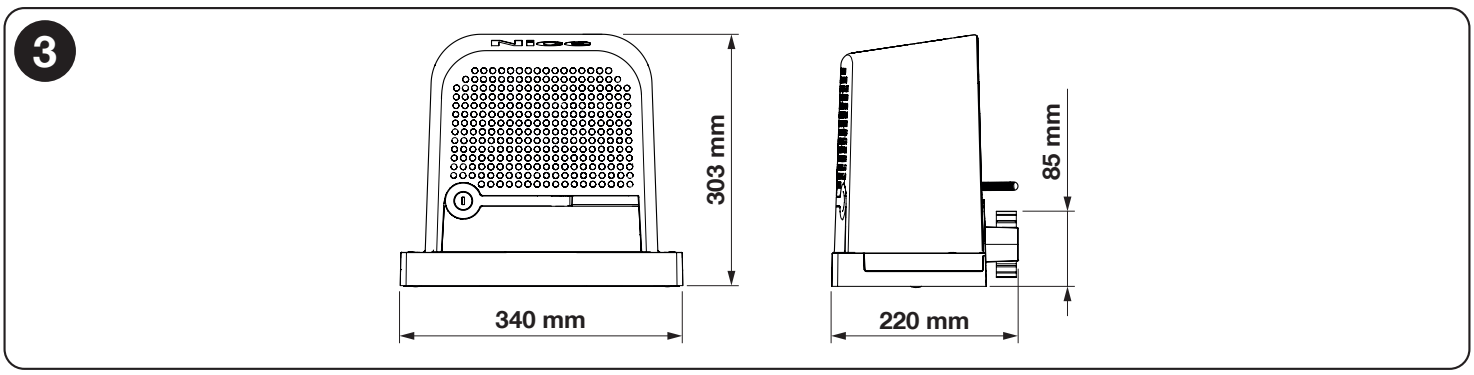

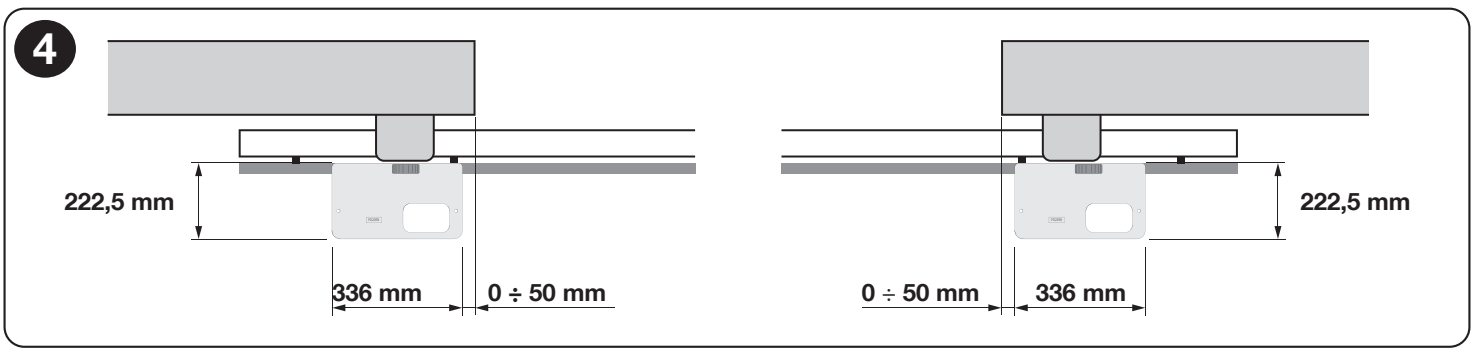

YAYDOOR www.yaydoor.com

01.	Dig the foundation and route the electric cable ducting 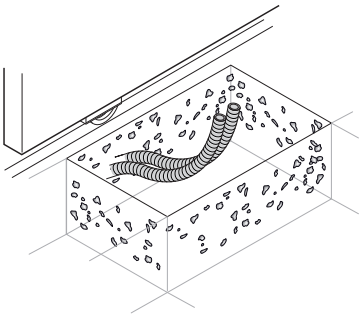
02.	Secure the two anchors to the foundation plate with one nut above and one below. 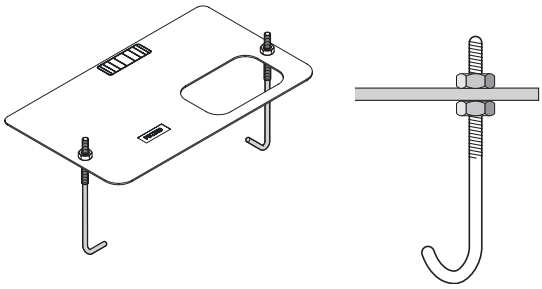
03.	Now cast the concrete to secure the foundation plate. **⚠ Before the concrete hardens, make sure the foundation plate is perfectly level and parallel to the gate.** 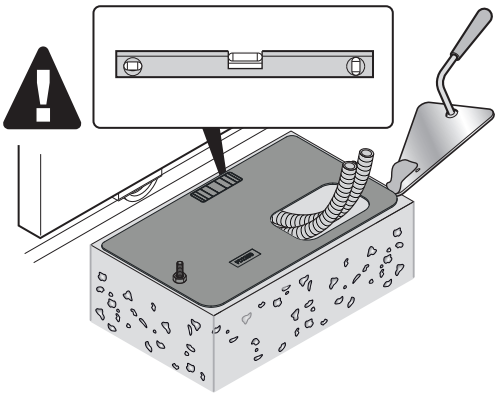
04.	Allow the concrete to harden.
05.	Secure the gearmotor:
	a - Remove the upper nuts 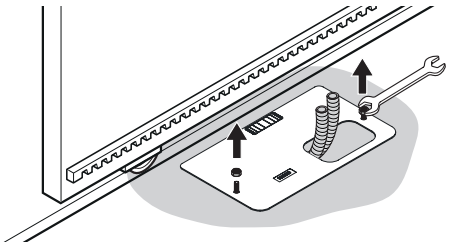
	b - Unlock the gearmotor (1÷3) c - Remove the two screws and lift the casing (4) 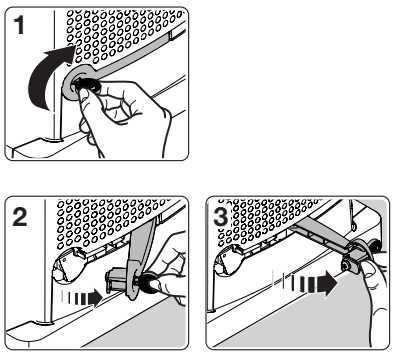 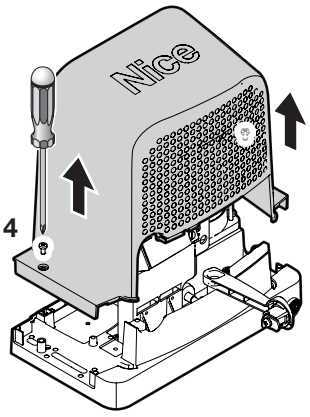

d - Place the gearmotor on the foundation plate

e - Fit the provided washers and nuts and hand tighten them

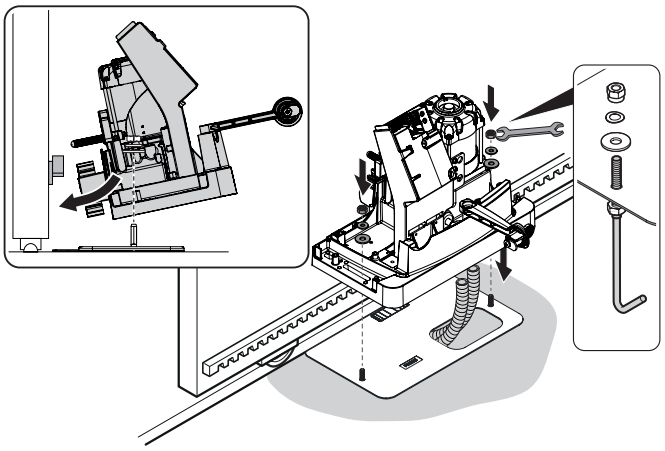

f - Check that the gearmotor is correctly positioned on the foundation plate

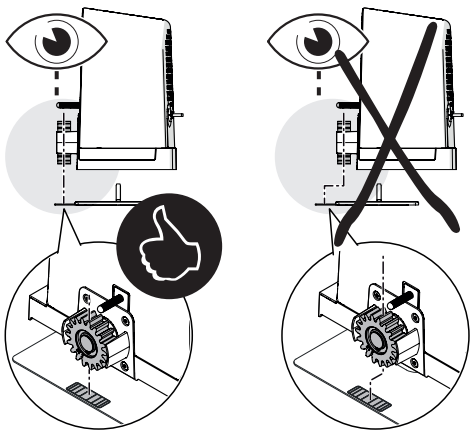

g - Open the gate fully by hand

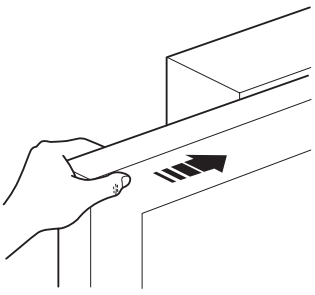

h - Rest the first section of rack on the gearmotor's pinion: make sure that it corresponds to the start of the gate section and that there is a gap of 1-2 mm between the rack and the pinion itself (this is to prevent the gate loading the gearmotor shaft

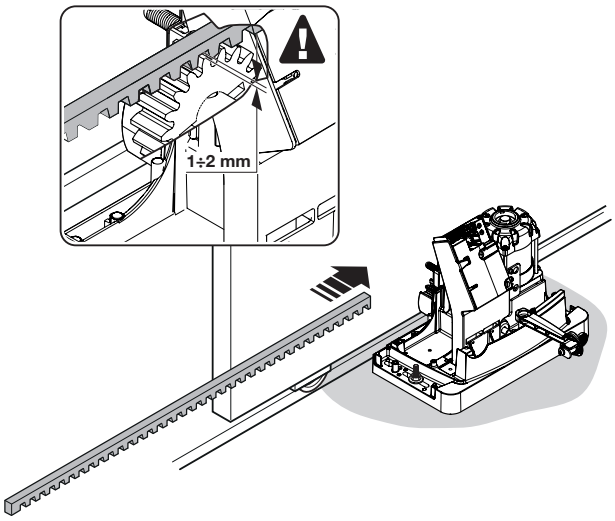

i - Secure the rack section

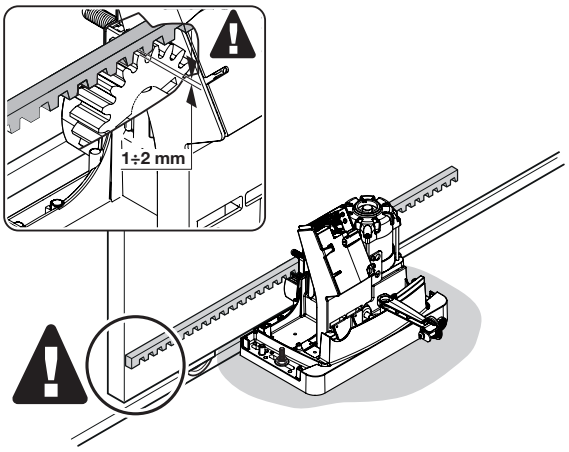

j - Check that the gearmotor is properly aligned with respect to the gate leaf and the rack

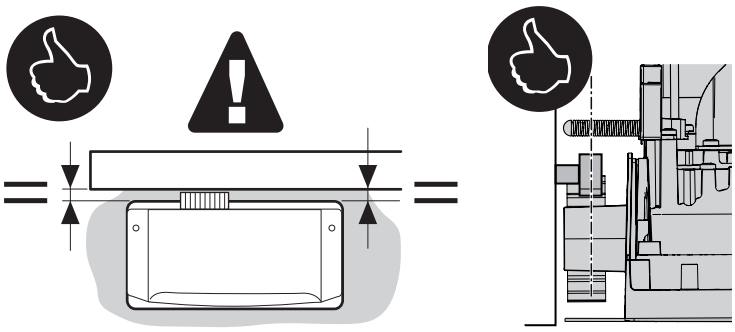

k - Check that the distance between the pinion and the rack is 1÷2 mm. If the space between the pinion and the rack is greater than 2 mm, proceed with step k, otherwise proceed with step l;

remove the motor from its housing and add the four adjustment nuts in the slots provided at the bottom of the base. After repositioning the motor by following steps 5 to 8, adjust the height of the gear motor using the adjustment screws and bring the pinion to about 1 or 2 mm from the rack to prevent the weight of the door from resting on the gear motor

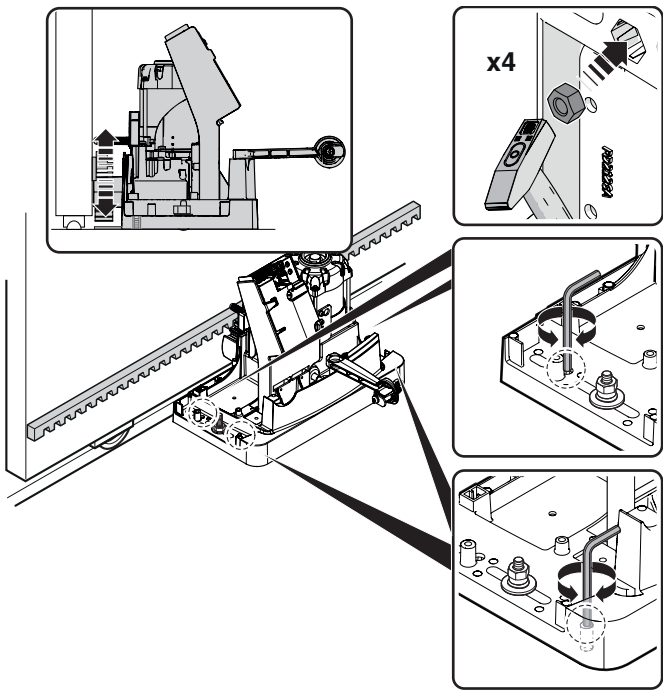

l - Slide the gate by hand and, using the pinion as a reference, install the other sections of rack

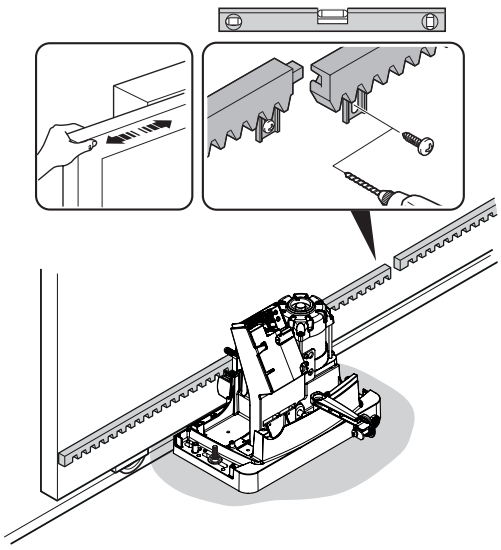

m - Cut any excess rack off the end

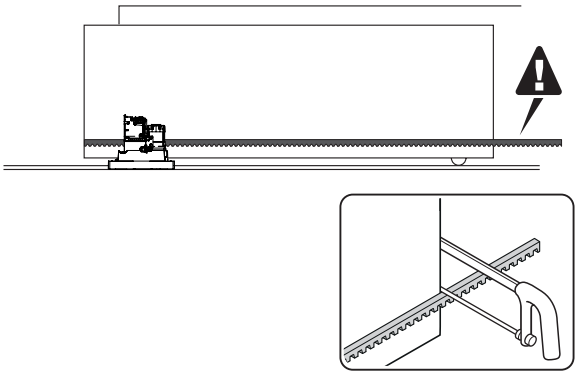

06. Slide the gate open and closed by hand to check that the rack is properly aligned with the pinion.

N.B.: make sure that there is a gap of 1-2 mm between the rack and pinion for the entire length of the gate

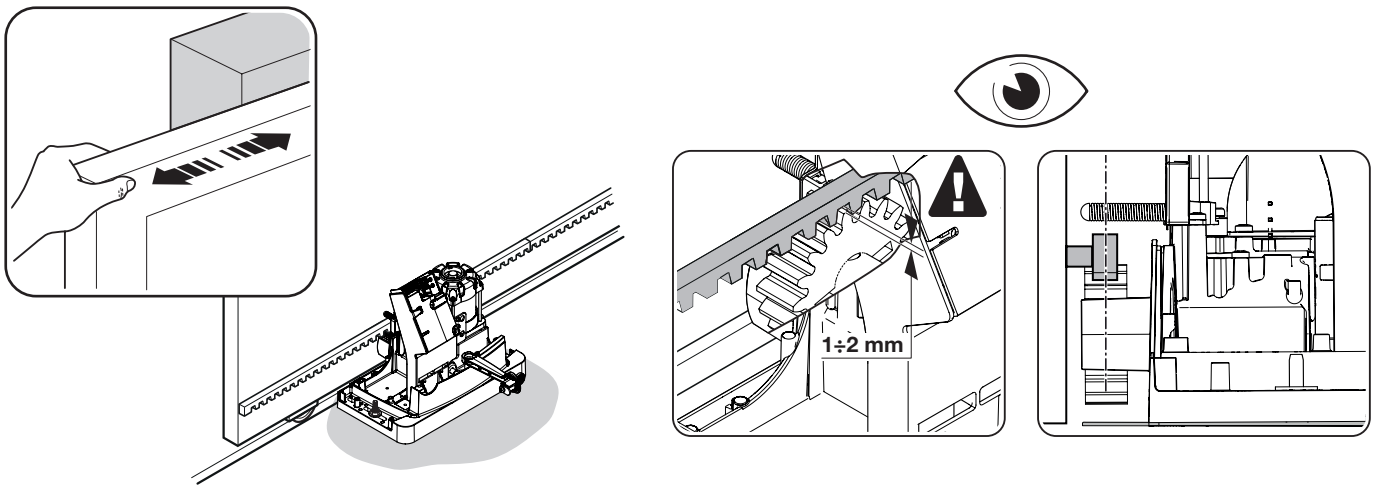

07. Vigorously tighten the nuts to fasten the gearmotor to the foundation plate

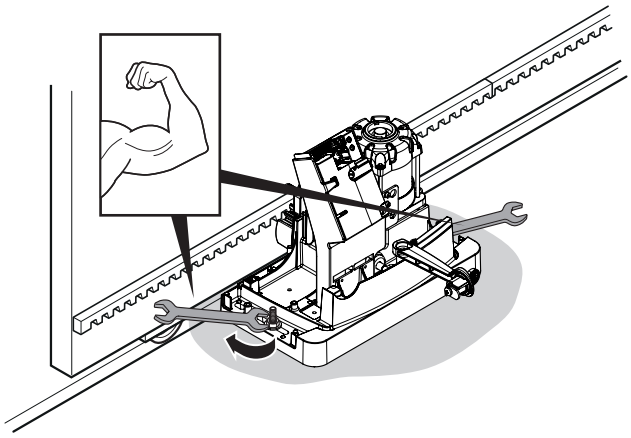

08. Install the OPEN and CLOSE limit switch brackets: proceed in the same way for each limit switch

OPEN:

a - Slide the gate open by hand, stopping it 2/3 cm before the mechanical stop

b - Slide the limit switch bracket along the rack in the open direction until the limit switch trips (you will hear it click)

c - After you hear the 'click', move the bracket further forwards by 2 cm (minimum)

d - Secure the bracket to the rack with the provided grub screws

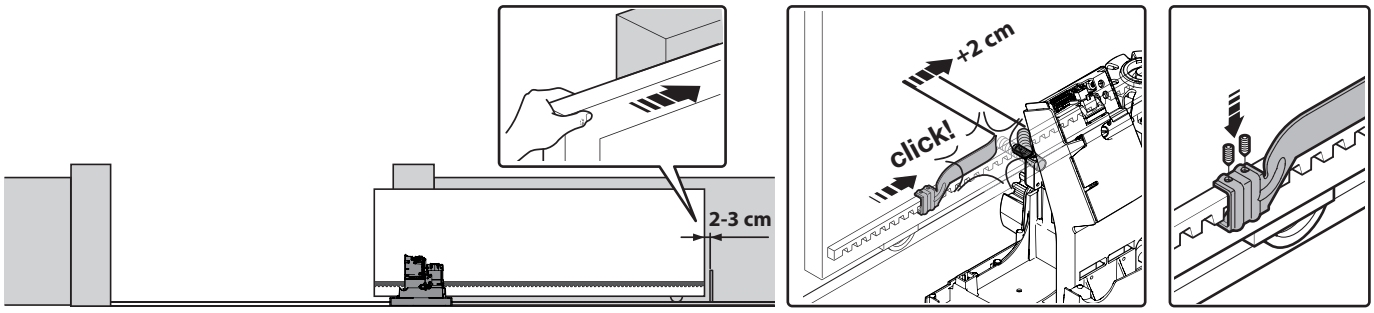

CLOSE:

a - Slide the gate closed by hand, stopping it 2/3 cm before the mechanical stop

b - Slide the limit switch bracket along the rack in the close direction until the limit switch trips (you will hear it click)

c - After you hear the 'click', move the bracket further forwards by 2 cm (minimum)

d - Secure the bracket to the rack with the provided grub screws

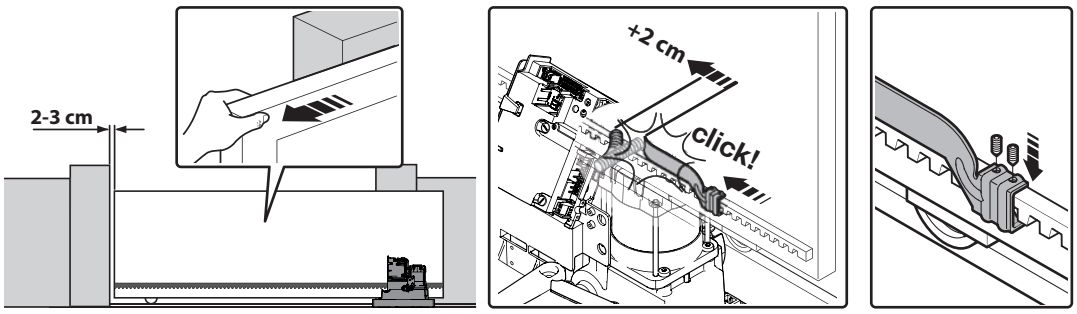

09. **If threaded anchors are used, once the motor has been fastened with the nut, check that the casing does not come into contact with the protruding part of the threading. If it does, eliminate the excess threading**

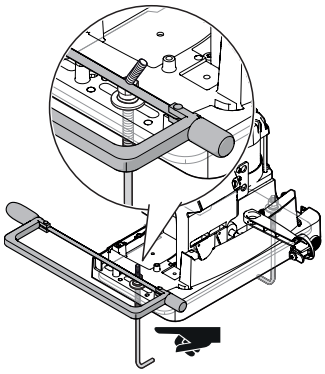

10. a - Insert the casing and fasten it with the two screws (1)

b - Lock the gearmotor (2÷4)

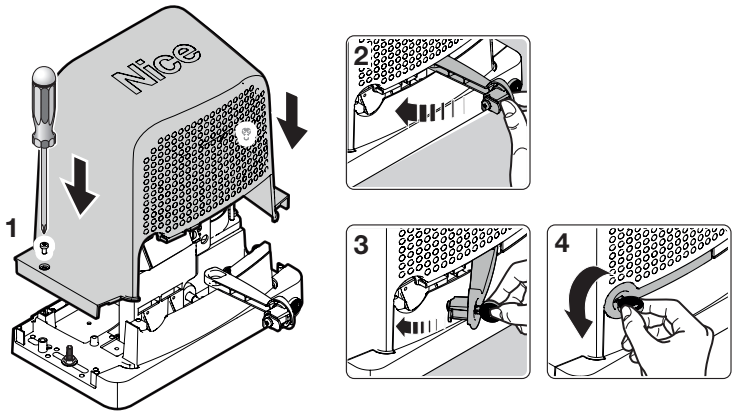

11. Apply the adhesive label with the unlocking instructions

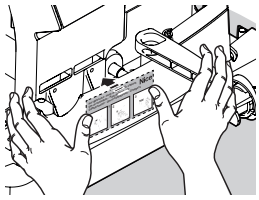

To install the devices provided in the system, refer to the respective instruction manuals..

⚠ IMPORTANT! – The gearmotor is set up (at the factory) for installation on the right (fig. 5); if it must be installed on the left, proceed as shown in fig. 6 (a - b).

5

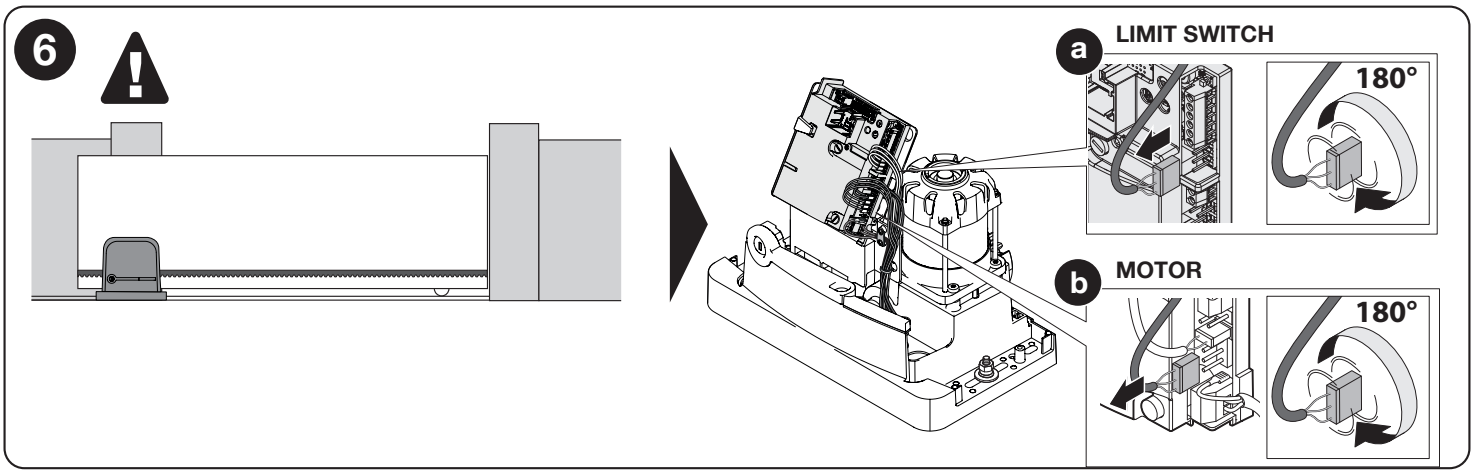

4 ELECTRICAL CONNECTIONS

⚠ CAUTION! - All electrical connections must be carried out with the system disconnected from the mains. Incorrect connections can cause damages to the equipment and injuries to people.

Fig. 2 shows the hookup of a typical installation; fig. 7 shows the connections to be made on the control unit.

4.1 - Types of electrical cables

Table 3 - Types of electrical cable (see fig. 2)

	Connection	Type of cable	Maximum length
A	POWER	3 x 1.5 mm^2	30 m *
B **C**	FLASHER WITH AERIAL	1 cable: 2 x 1.5 mm^2 1 shielded RG58 cable	10 m 10 m (< 5 m recommended)
D	PHOTOCELLS	1 cable: 2 x 0.25 mm^2 (TX) 1 cable: 4 x 0.25 mm^2 (RX)	30 m 30 m
E - F	KEY SWITCH	1 cable: 2 x 0.5 mm^2 **	20 m

***** A power supply cable longer than 30 m may be used provided it has a larger gauge, e.g. 3 x 2.5 mm^2, and that a safety grounding system is provided near the automation unit.
****** The two 2 x 0.5 mm^2 cables can be replaced by a single 4 x 0.5 mm^2 cable.

4.2 - Electrical cable connections

For electrical cable connections, refer to **fig. 7**.

Table 4 - Description of electrical connections

Terminals	Function	Description
9 - 10	Stop	- input for devices that lock or stop the current operation; with appropriate precautions, “Normally Closed” or “Normally Open” contacts or constant resistance devices can be connected to the input. Other information on STOP can be found in paragraph 8.1.1 - STOP input
9 - 11	Photo	- input for safety devices which when tripped reverse the gate's direction of movement: NC (Normally Closed) contacts may be used - for further details, refer to par. 8.1.2 Photocells.
8 - 12	Phototest	Every time a manoeuvre is started, the operation of the photocells is checked; the manoeuvre starts if the test is positive. This is possible using a particular type of connections: the transmitters of the “TX” photocells are powered separately than the “RX” receivers. For further details, see paragraph 8.1.2 Photocells.
9 - 13	Step-by-step	input for devices which control movement. NO (Normally Open) contacts can be connected
4 - 5	Flashing light	- flasher output (auto-intermittent) - when active, the output supplies 230 V

1 - 2	Aerial	- radio receiver aerial input - aerial integrated into flasher; an external aerial can be used if desired

To make the electrical hookup, proceed as described below with reference to fig. 7:

01.	Unlock the gearmotor
02.	Open the cover: remove the two screws and lift the casing
03.	Run the power cable through the hole (leave 20/30 cm of free cable) and connect it to its terminal clamp
04.	Run the cables of the equipment to be installed or already present through the provided hole (leave 20/30 cm of free cable) and connect them to their terminal clamps (see fig. 7)
05.	Perform the desired programming: chapter 7

7

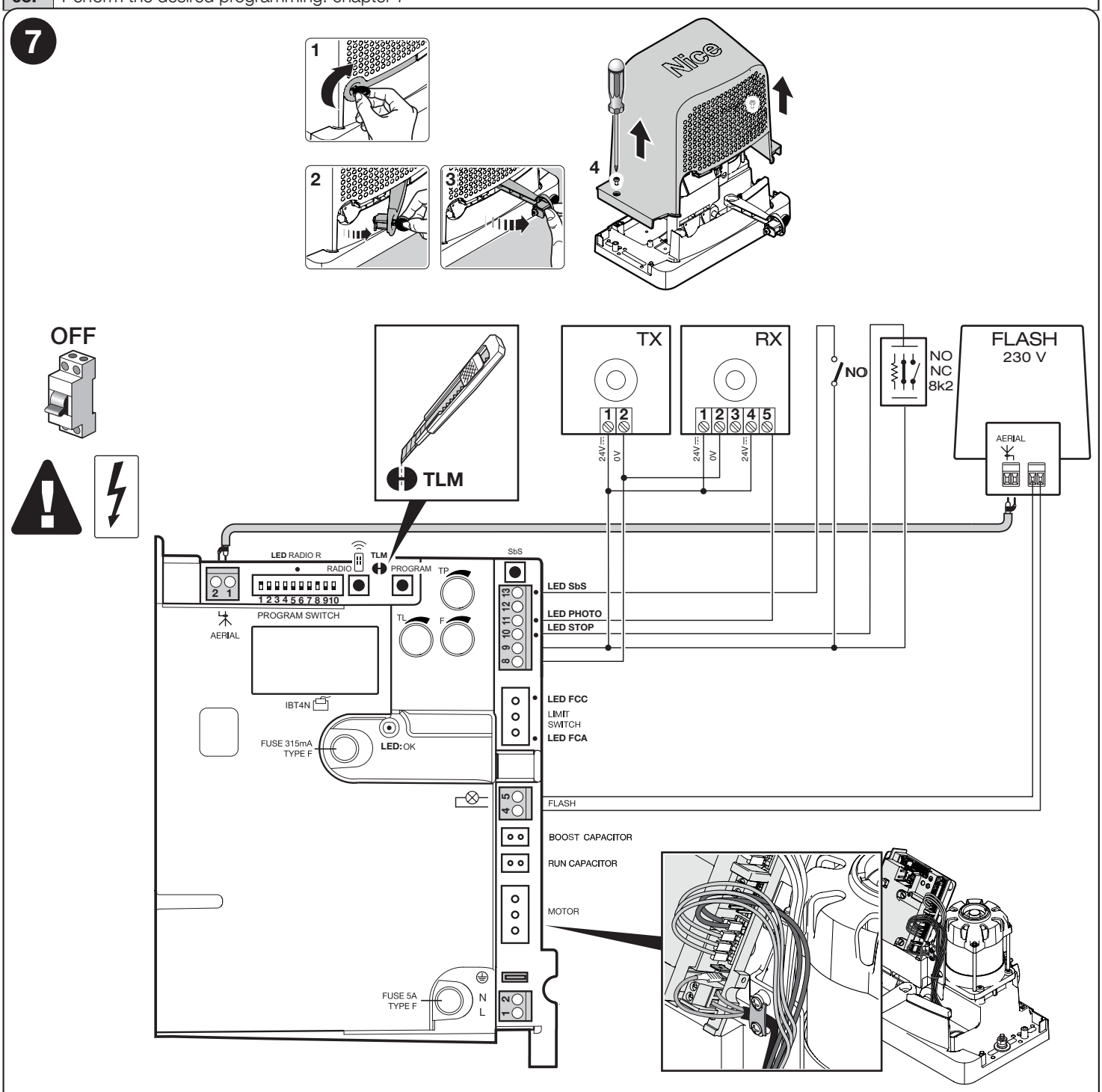

AERIAL	=	AERIAL	**LIMIT SWITCH**	=	LIMIT SWITCH
PROGRAM SWITCH	=	MICRO SWITCHES	**FLASH**	=	FLASHER
LED RADIO	=	RADIO LED	**BOOST CAPACITOR**	=	BOOST CAPACITOR
LED PHOTO	=	PHOTOCELL LEDS	**RUN CAPACITOR**	=	RUN CAPACITOR
LED SbS	=	STEP-BY-STEP LED	**MOTOR**	=	MOTOR
LED OK	=	OK LED	**FUSE**	=	FUSE
SbS	=	STEP BY STEP KEY		=	RADIO KEY
PROGRAM	=	PROGRAMMING KEY			

5 STARTING THE AUTOMATION AND CHECKING THE CONNECTIONS

5.1 - Hooking the automation up to the mains

⚠ CAUTION! – The automation must be hooked up to the mains by an expert electrician, in observance of established local regulations.

Proceed as follows

01.	Manually release the gearmotor so that the gate can be opened and closed 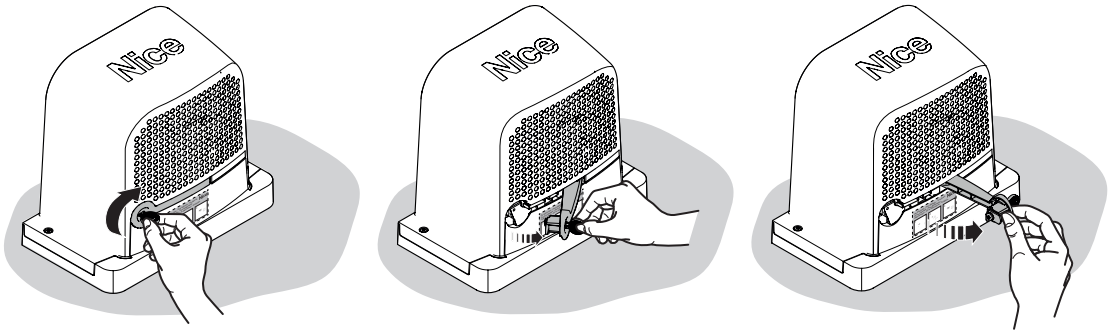
02.	Move the gate to the halfway position
03.	Manually lock the gearmotor 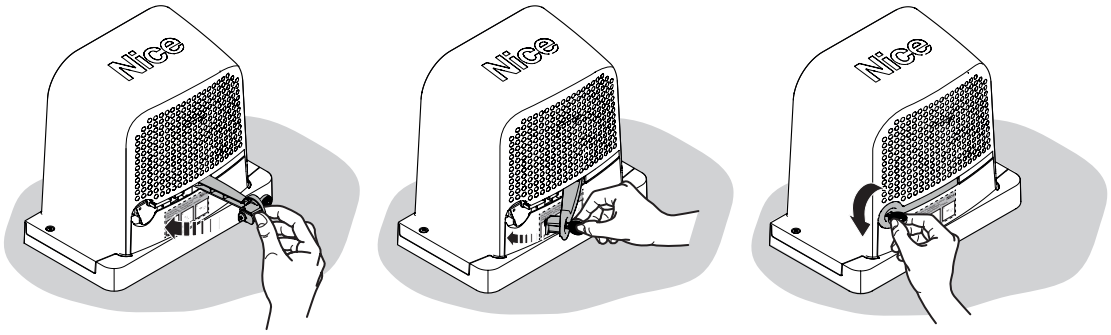
04.	Power the automation up and check: - that the OK LED flashes regularly: 1 flash per second - that the photocell LED and the two limit switch LEDs are lit - that the gate does not move and that the flasher is off 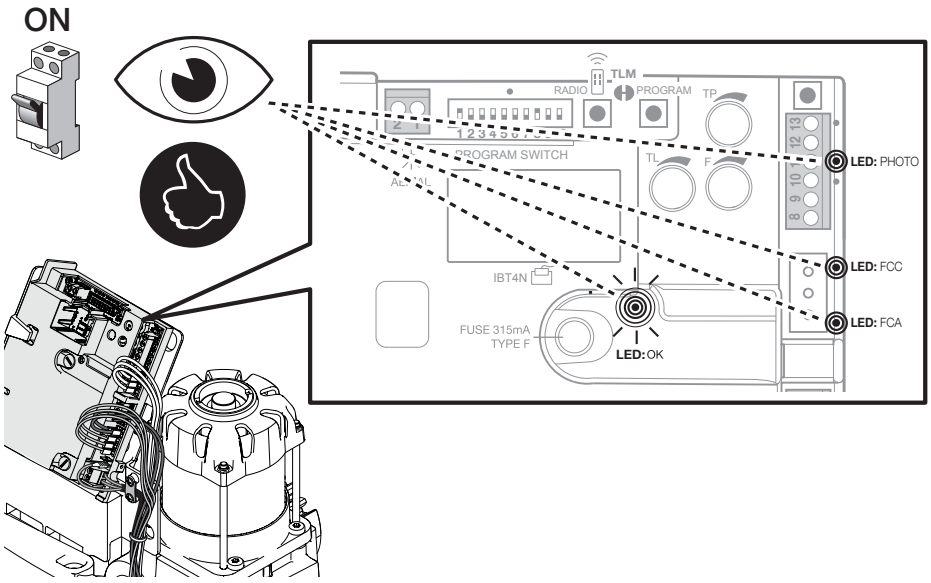
⚠	if any of these conditions are not satisfied, proceed as follows (step 05)
05.	Shut off mains power to the automation and check the electrical connections, photocell alignment, and fuses. If necessary, check the connections of the two limit switches: move the limit switch levers and check that the switch trips and turns off the FCA / FCC led on the control unit respectively

YAYDOOR www.yaydoor.com

5.2 - Learning the devices

Once the power is connected, the control unit must recognize the devices connected on the STOP input and the configuration of the PHOTO input.

⚠ CAUTION! – If the control unit is new or after a total reset, the control unit goes into standby mode after 10 minutes (600 s) after the device recognition procedure; the time becomes 5 minutes (300 s). For more information, refer to paragraph ""7.3.5 - Enabling/ disabling standby" to page 20".

Table 7		
1	Press the PROGRAM key and do not release it	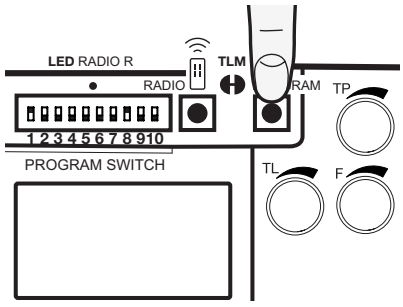
2	After 3 seconds, the device recognition procedure starts; the OK LED starts flashing quicker, keep pressing the PROGRAM key	
3	Wait a few seconds for the control unit to finish recognising the devices	
4	At the end, the STOP LED must be lit and the OK LED must be uninterruptedly on with a green light	
5	Release the PROGRAM key within 10 seconds	
6	At this point the OK LED flashes green 3 times confirming the recognition is complete	
7	If the recognition phase is not successful, the OK LED flashes red 5 times	

Learning the connected devices can be repeated at any time, even after installation, for example if a device is added; to carry out the new learning procedure, see section 8.1 "Adding or removing devices".

Once the device recognising procedure has been completed, check the PHOTO and STOP leds are lit; if this is not the case, proceed as per point 05 of paragraph 5.1 - Hooking the automation up to the mains. Once the operations have been completed, close the cover with its bolt.

6 TESTING AND COMMISSIONING

These are the most important phases in automating the gate and ensuring maximum system safety.
They must be carried out by qualified and expert personnel that must decide on the tests required to verify the solutions adopted with regard to the risks present and the compliance with laws, directives and regulations; in particular, all the requirements of the EN 13241-1 and EN 12453 standards.
The additional devices must undergo a specific test with regard to both their functions and interaction with ROBO: please refer to the instruction manuals of the individual devices.

6.1 - Testing

The testing procedure can also be performed as a periodic check of the automation devices. Each component of the system (sensitive edges, photocells, emergency stop, etc.) requires a specific testing phase. To do so, follow the procedures given in the instruction manuals.
Run the test as follows:

01.	Ensure that all specifications in chapter 1 “WARNINGS” have been observed in full
02.	Unlock the gearmotor and verify whether it is possible to manually move the gate open and closed with a force no greater than the value shown in “Table 1 – Essential characteristics” 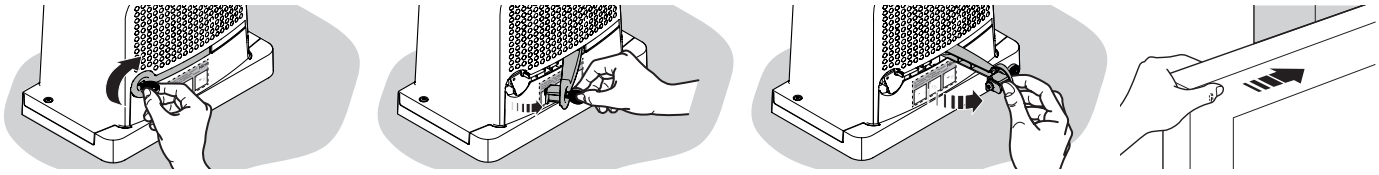
03.	Lock the gearmotor 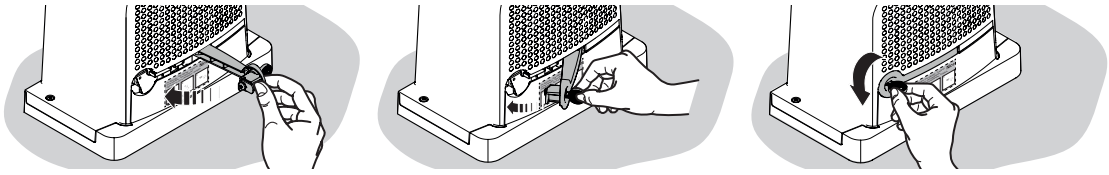
04.	Using the key switch, control key or radio transmitter, test the opening and closing of the gate and make sure that it moves in the intended direction
05.	The test should be carried out a number of times to make sure that the gate moves smoothly, that there are no points of excessive friction and that there are no defects in the assembly or adjustments
06.	Check the operation of the safety equipment, one by one (photocells, sensitive edges, etc.)
07.	Check the operation of the photocells and any interference with other equipment: 1 - pass a dia. 5 cm length 30 cm cylinder along the optical axis, first close to the TX, then close to the RX 2 - check that the photocells trip in any condition, switching from active to alarm and back 3 - check that tripping the photocell results in the intended response of the control unit: e.g., when tripped during a closing stroke, the gate changes direction
08.	If the dangerous situations caused by the movement of the door have been safeguarded by limiting the force impact, the user must measure the impact force according to the EN 12453 standard. If the adjustment of the “force” is used to assist the system for the reduction of the impact force, try to find the adjustment that gives the best results.

6.2 - Commissioning

Commissioning can take place only after all testing phases have been terminated successfully (par. 6.1).
Partial or “makeshift” commissioning is strictly prohibited.

01.	Create and store (for minimum 10 years) the technical dossier of the automation that must include: overall design of the automation, diagram of the electrical connections, risk assessment and relative solutions adopted, declaration of conformity of the manufacturer of all the devices used (for ROBO use the attached CE Declaration of conformity); copy of the user instruction manual and the automation maintenance plan
02.	Using the key switch or radio transmitter, test the opening and closing of the gate and make sure that it moves in the intended direction
03.	Prepare the declaration of conformity of the automation system and deliver it to the owner.
04.	Give the owner the user manual (tearout insert)
05.	Prepare and give the owner the maintenance schedule
06.	The force adjustment is an important safety aspect and must be done with care by an expert technician. **Important!** - Adjust the force to enable the gate to move as intended; higher forces than this can cause injury to animals and persons or damage to property if the gate collides with an obstacle
07.	Before commissioning the gate, inform the owner in writing about the attendant residual risks.

7 PROGRAMMING

In this manual the programming procedures are explained with the use of icons and their meanings are given in the following glossary:

GLOSSARY			
Symbol	**Description**	**Symbol**	**Description**
	led on		wait ...
	led off		observe / check
	led flashing		press and release the key
OFF	shut off mains power		hold down the key
ON	turn on mains power		release the key
	press and release the desired key on the radio transmitter to be memorized		release the key exactly when the led behaves in the specified manner (on, flashing, off)
	hold down the desired key on the radio transmitter to be memorized		correct procedure
	release the transmitter key		INCORRECT procedure

The control unit has a variety of factory settings which can be reprogrammed: this chapter describes the available functions and how to program them. Check also chapter 8 “Detailed information”.

The control unit is equipped with microswitches, trimmers and the keys described below.

Name	Symbol	Description
PROGRAM SWITCH		Activates a function
Trimmer **TL**	TL	Sets the ‘Operating Time’ parameters (see paragraph 7.1.1)
Trimmer **TP**	TP	Sets the ‘Pause Time’ parameters (see paragraph 7.1.1)
Trimmer **F**	F	Sets the ‘Force’ parameters (see paragraph 7.1.1)
RADIO key		Programs the radio receiver
PROGRAM key		Use for device programming

Factory settings (default)		
Micro switches: **Semiautomatic (1 = ON - 2 = OFF)** **Slow down (8 = ON)**		
Trimmer TL (Operating Time)	**Trimmer TP (Pause Time)**	**Trimmer F (Force)**
	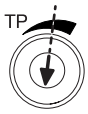	
⚠ **CAUTION! - Every time the selection of micro switches 1 and 2 is changed, it is necessary to repeat the device learning procedure as described in paragraph 5.2.**		

7.1 - Adjustable parameters: Trimmer (TL - TP - F)

The control unit's parameters can be adjusted with three trimmers (fig. 7)

TL (Operating Time)		
Operating mode	**Adjustment**	
sets the maximum duration of an Open or Close movement	**01.**	Select 'Semiautomatic' or 'Automatic' and set micro switch 1 to 'ON'
	02.	Run a full Open and Close cycle: check that the maximum duration setting (Open / Close) is high enough and that a margin of 2 or 3 seconds remains. Adjust trimmer TL to its maximum setting if necessary. **To adjust the slowdown, see the description of Switch 8 paragraph 7.2.** N.B.: if this time is not sufficient, cut the **TLM** jumper next to trimmer TL (fig. 7) to obtain a 'Long Operating Time' (TLM)
TP (Pause Time)		
Operating mode	**Adjustment**	
sets the time between the end of an Open movement and the start of the next Close movement	**01.**	select 'Automatic' and set micro switch 2 to 'ON'
	02.	set trimmer TP to the desired value;
	03.	to check the time setting, run a full Open movements and see how long it takes before the Close movement starts.
F (Force)		
⚠**CAUTION! – Adjustments to this parameter are safety critical: take great care when making this adjustment.**		
To adjust the parameter, try various settings: you must measure the force applied by the gate when moving and compare it with local regulations.		

7.2 - Programmable functions

The control unit has a set of micro switches (PROGRAM SWITCH - fig. 7) which activate functions to adapt the automation to the user's needs as well as making it safer to use.
The micro switches select the operating modes and program the functions, as described in Table 5.

To activate/deactivate a function:

Micro switches (1 ... 10)	ACTIVATE	DEACTIVATE
	ON	OFF
IMPORTANT! - Some functions are safety critical; make sure to check which function is safest.		

Table 5 - Programmable functions

Switches 1-2	Operation
Off-Off	Manual (hold-to-run)
On-Off	Semiautomatic
Off-On	Automatic (automatic closing)
On-On	Automatic + Always Closes
Switch 3	**Operation**
On	Condominium (not available in hold-to-run mode)
Switch 4	**Operation**
On	Pre-flashing

Switch 5	Operation
On	Closes 5 seconds after 'Photo' if set to 'Automatic' or 'Close after Photo' if set to 'Semiautomatic'
Switch 6	**Operation**
On	Safety "Photo" also when Opening
Switch 7	**Operation**
On	Gradual Start-up
Switch 8	**Operation**
On	Slow down
Switch 9	**Operation**
On	Medium braking
Switch 10	**Operation**
On	Light braking

Switches 1-2:	
Manual operation	The movement is only executed while the control is active (transmitter key held to run).
Semiautomatic operation	Sending a command executes the entire movement until the operating time expires or the gate trips the limit switch.
Automatic operation	After an Open, the system pauses and then automatically Closes the gate.
Always closes operation	Follows a power failure: if, when power is restored, the control unit determines that the gate is open, it automatically flashes the flasher for five seconds and then runs a Close cycle.
Switch 3:	
Condominium operation	When a "Step-by-Step" command is sent and the gate starts to Open, it cannot be stopped by any other "Step-by-Step" or Open command sent by radio until it has completed. When closing, on the other hand, sending a new Step-by-Step command will stop and reverse the movement.

Switch 4:

When a command is sent, the flasher starts flashing and, after 5 seconds (2 seconds in Manual mode), the movement starts.

Switch 5:

This function, when set in Automatic mode, holds the gate open only for the time required for vehicles or pedestrians to pass through it; when the Photo device is cleared, the movement stops and a Close movement starts after a 5 second delay.
If the functions is set in Semiautomatic mode, when the photocells are tripped while the gate is closing, automatic Close is activated with the programmed Pause Time.

Switch 6:

The Photo function is usually active only during Close movements; if micro switch 6 is set to "ON", tripping the photocell interrupts Open movements too. On the other hand, in Semiautomatic or Automatic modes, the Open movement starts again as soon as the photocell clears.

Switch 7

This function activates a soft start to gate movements to prevent them moving jerkily.

Switch 8:

Slow down, which reduces the speed to 30% of its nominal value, reduces the impact force of the gate at the end of a movement.
The gearmotor is factory set with the "slowdown" function active (Switch 8 = ON). The automation will start slowing down after a time equal to TL/2 (where TL is the set work time). By default the work time is set to 90s (3/4 turn), which means that the slowdown will start 45s after the start of the manoeuvre from the fully closed or the fully open position.
Depending on the span of the gate, the installer may decide that it is necessary to adjust the work time (TL) so that the slowdown phase (TL/2) can start roughly 50–70 cm before the intervention of the limit switches (**). The slow down function not only reduces the speed of the gate but also the torque exerted by the motor (by 70%). **CAUTION** – In automations which demand a high motor torque, setting this function can stop the motor.

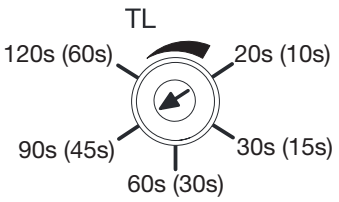

(**) Note: if this parameter is modified, the resulting change will be visible during the first opening manoeuvre commanded after the change was made.

Switches 9 - 10:

Setting a combination of switches 9 and 10, the motor brake procedure is carried out; according to the combination, the intensity of the braking power is established on the basis of the following setup:

Table 6		
dip9 off	dip10 off	braking off
dip9 off	dip10 on	light braking
dip9 on	dip10 off	medium braking
dip9 on	dip10 on	intense braking

7.3 - Integrated radio receiver

For remote control operation, the control unit has an integral 433.92 MHz radio receiver compatible with O-CODE coding.

7.3.1 - Memorisation of radio transmitters

Each radio transmitter is recognised by the radio receiver by means of a “code” which is different from that of any other transmitter. There are two types of memorisation: Mode 1 and Mode 2.

- **Mode 1:**

automatically assigns the commands indicated in table 8 to the transmitter’s keys.
Each transmitter is memorised in a single step, with all keys programmed: it does not matter which key is pressed.
N.B.: when memorised in Mode 1, a transmitter can control only one automation.

Table 8	
Transmitter key	**Command**
1	Step-by-step
2	Pedestrian opening
3	Open
4	Close
N.B.: single-channel transmitters have only key 1; two-channel transmitters have keys 1 and 2	

Mode 1 memorisation

01.	02.	03.	04.
x **4s**		within 10s x **3s**	
RADIO KEY	RADIO KEY AND LED	TRANSMITTER DESIRED BUTTON	RADIO LED

- **Mode 2:**

freely assigns a command among those listed in table 9.
For each phase, only one key is memorised (the one pressed during memorisation).
(One memory location is occupied for each key).

Table 9	
Transmitter key	**Command**
1	Step-by-step
2	Pedestrian opening
3	Open
4	Close
5	Stop

Mode 2 memorisation

	01.	02.	03.	04.
Step-by-step	x **1**		within 10s x **3s**	
Pedestrian opening	x **2**		within 10s x **3s**	
Open	x **3**		within 10s x **3s**	
Close	x **4**		within 10s x **3s**	
	RADIO KEY	RADIO LED	TRANSMITTER DESIRED BUTTON	RADIO LED
N.B.: if you wish to memorise other transmitters, repeat step 03 within 10 sec. The memorisation procedure terminates after 10 sec if no other operations are run				

7.3.2 - “Remote” memorisation

You can memorise a new transmitter without having to operate the receiver key (10-20 m from the receiver).

You must have a previously memorised transmitter (old). The new transmitter will be memorised with the same characteristics as the old one.

⚠ **Important! Remote memorisation may be done on all receivers within the range of the transmitter; therefore, only the one involved in the operation should be kept switched on.**

Standard procedure

⚠ During the procedure, if the old transmitter was memorised in:

- Mode 1 → press any key
- Mode 2 → press the key you wish to memorise

01.	With the motor stopped, stand close to the control unit
02.	**NEW** transmitter * x **5s**
03.	**OLD** previously memorised transmitter x **1s** x **1s** x **1s**
04.	**NEW** transmitter * x **1s**

If the procedure terminated successfully the new transmitter is memorised

*** same key as NEW transmitter**

⚠ The RADIO LED can also perform the following:

1 rapid flash if the transmitter is already stored, 6 flashes if the transmitter's radio coding is not compatible with that of the control panel receiver or 8 flashes if the memory is full.

7.3.3 - Deleting radio transmitters

⚠ This procedure can be carried out ONLY if the radio memory is unlocked.

Table 10 **Transmitter deleting procedure**		= RADIO key = RADIO led
1	Hold down the RADIO key on the control unit until step 02	
2	Wait for the radio led R to come on, then wait for it to go off and finally wait for 3 flashes	
3	Release the key during the 3rd flashing	
⚠	If the memorisation has been successful, the radio led R on the control unit flashes 5 times	

7.3.4 - Locking / Unlocking the radio memory

⚠This procedure locks the memory, preventing acquiring and deleting radio transmitters.

Table 11 **Locking / Unlocking the radio memory**		= RADIO key = RADIO led
1	Switch the power supply to the control unit off	OFF
2	Hold down the RADIO key on the control unit (until step 04)	
3	Switch the power back on (continue holding the key down)	ON
4	After 5 seconds, the radio led R flashes slowly twice; release the key	5s
5	Repeatedly press and release the radio key on the control unit (within 5 seconds), to select one of the following options: - led off = Deactivation of the memorisation lock. - led on = Activation of the memorisation lock.	within 5s
⚠	5 seconds after pressing the radio key for the last time , the radio led R flashes slowly twice to mark the end of the procedure.	5s

7.3.5 - Enabling/disabling standby

⚠ This procedure allows you to enable or disable standby using the control panel buttons. When standby is active, it is not possible to change the time using the central buttons. To change the time, you must use OView or ProView. Initially, the standby activation time is set to five minutes (300 seconds). Please note that disabling standby will increase the product's energy consumption.

⚠ The control unit is normally in standby mode. To disable it, follow the procedure in Table 13.

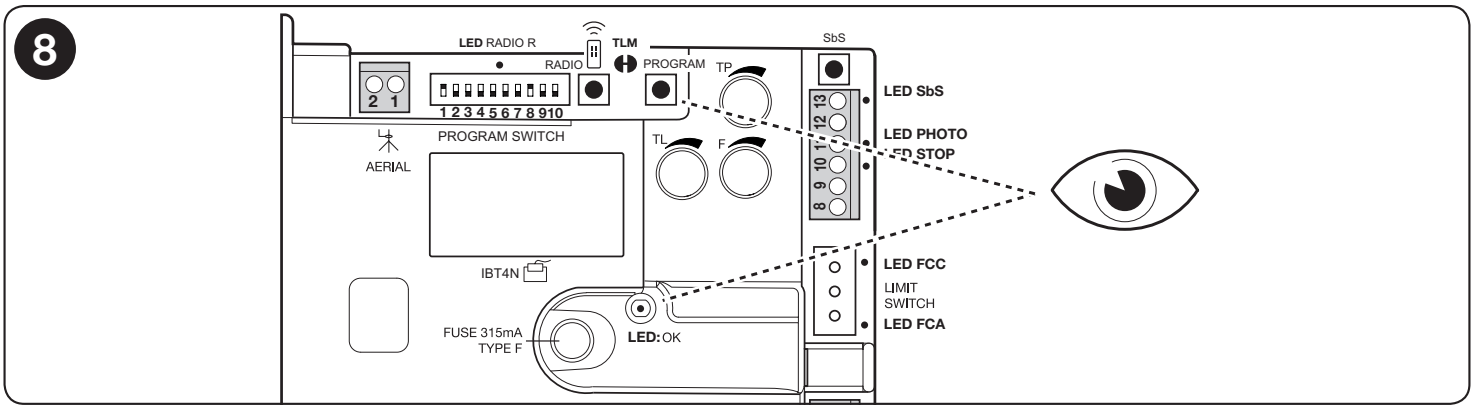

Table 12 **Checking the standby status**		= PROGRAM key = led OK
1	Press and release the PROGRAM button to select one of the following options:	
	Status 1 Standby **active**	
	Status 2 Standby **inactive**	

Table 13 **Changing the status**		= PROGRAM key = led OK
1	Press and release the PROGRAM button to select one of the following options:	
	Status 1 Standby **active**	
	Status 2 Standby **inactive**	
2	Press and release the PROGRAM button to change the status options:	
	Status 1 Standby **active**	
	Status 2 Standby **inactive**	
3	To save the required status, press (for at least 5 seconds) until the OK LED lights up at normal frequency (1 Hz).	

8.1 - Adding or removing devices

Automation devices can be added or removed at any time; in particular at the STOP input, various types of devices can be connected as described in the following paragraphs; ⚠ WARNING! - at the end of the modifications made to the configuration of the alt input and of the photocell input it is necessary to repeat the device learning procedure as described in paragraph 5.2.

8.1.1 STOP input

Input that stops movement immediately, followed by a brief reverse of the manoeuvre.
Devices with NO (normally open), NC (normally closed) contact output or with output with constant resistance (*), for instance sensitive edges, can be connected to this input. The control unit recognizes the type of device connected to the STOP input while acquiring the devices (paragraph “5.2 - Learning the devices” to page 13).
In the presence of any change from the initial recognition, the automation stops and reverses its direction briefly.
With appropriate precautions, it is possible to connect more than one device, even of different type, to the STOP input:
- Numerous NO devices can be connected in parallel between themselves without any limit in quantity.
- Numerous NC devices can be connected in series between themselves without any limit in quantity.
- Numerous 8.2kΩ constant resistance devices can be connected “in cascade” with just one 8.2kΩ terminating resistor
- The combination of NO and NC is possible putting the 2 contacts in parallel with the warning of putting an 8.2kΩ resistor in series with the NC contact (this makes the combination of 3 devices also possible: NO, NC and 8.2kΩ).

⚠ If the STOP input is used to connect devices with safety functions, only the devices with 8.2kΩ constant resistance output guarantee category III safety against faults in compliance with the EN 13849-1 standard.
(*) Note: supports 8.2 kΩ or 4.1 kΩ double edge.

8.1.2 Photocells

To add a pair of photocells, proceed as follows:
01. Power up the receivers (RX) via terminals 8 - 9 (see figure 7)
On the other hand, the connection method of the transmitters depends on whether we want photocells to operate with the phototest mode active.
Phototest is a function in the control unit that increases the reliability of the safety devices, allowing reaching “category II” in compliance with the EN 13489-1 standard, with regard to the control unit and safety photocell assembly.
When a manoeuvre is activated, the involved safety devices are checked and the manoeuvre starts only if everything is OK.
If the test is negative (photocell blinded by the sun, wires short circuited, etc.), the fault is detected and the manoeuvre is not carried out.
To add a pair of photocells, connect them as follows.

Connection without “Phototest” function:
Power the transmitters and receivers directly from the service output of the control unit (terminals 8 and 9).

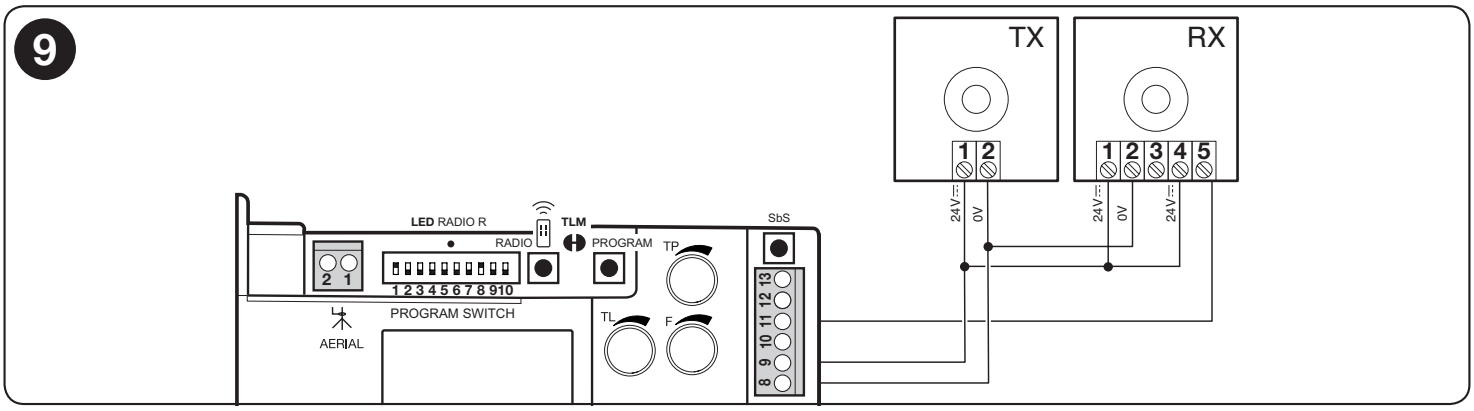

Connection with “Phototest” function:
Power the receivers directly from the service output of the control unit (terminals 8 and 9). Power for the photocell transmitters is not taken from the service output, but from the “Phototest” output between terminals 8 - 12. The maximum usable current on the “Phototest” output is 100mA.
⚠ To use the “Phototest” function, it is necessary to activate the “synchronisation” as described in the instruction manual of the photocells.

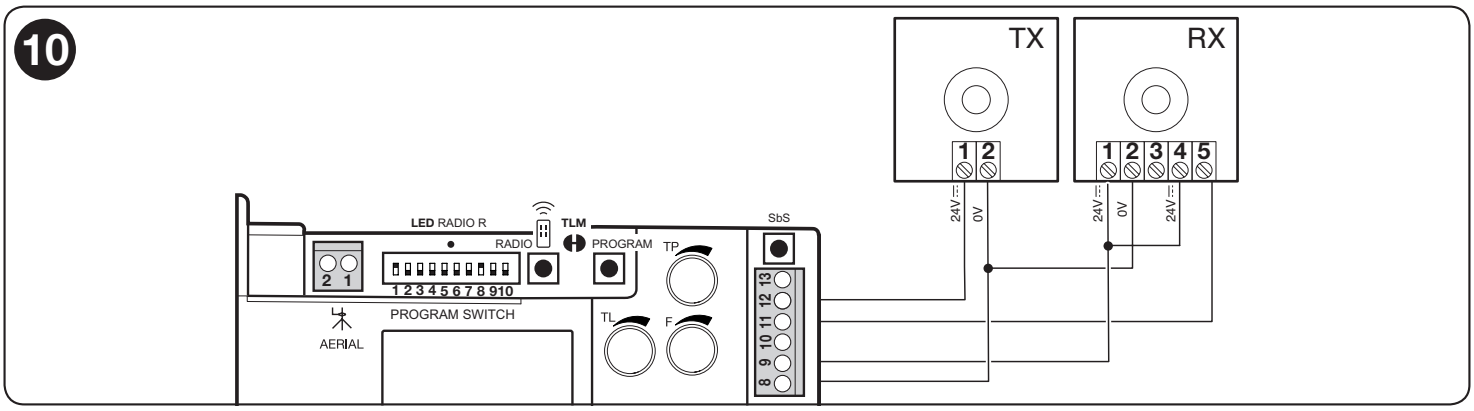

8.2 - Power for external devices

To power external devices (transponder badge reader, or backlighting for a keyswitch) connect the device to the control unit as shown in the figure.

The power supply voltage is 24V ⎓ (+/- 10%) with a maximum available current of 100 mA.

⚠ During Standby, this output is not active.

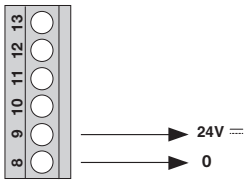

8.3 - Oview programmer connection

It is possible to connect the Oview programmer to the control unit via the IBT4N interface with a bus cable with 4 electrical wires inside. This unit allows the quick and complete programming of functions, adjustment of parameters, update of the control unit firmware, diagnosis to detect any malfunctions and periodic maintenance.

Oview allows operating the control unit from a maximum distance of 100 m. If more control units are connected among themselves in a 'BusT4' network, connecting Oview to one of these control units, it is possible to view all the control units connected in series (maximum 16 control units).

The Oview unit can remain connected to the control unit also during the automation normal operation, allowing the user to send the commands through a specific menu.

⚠ Caution! - Before connecting the IBT4N interface, disconnect the control unit from the mains.

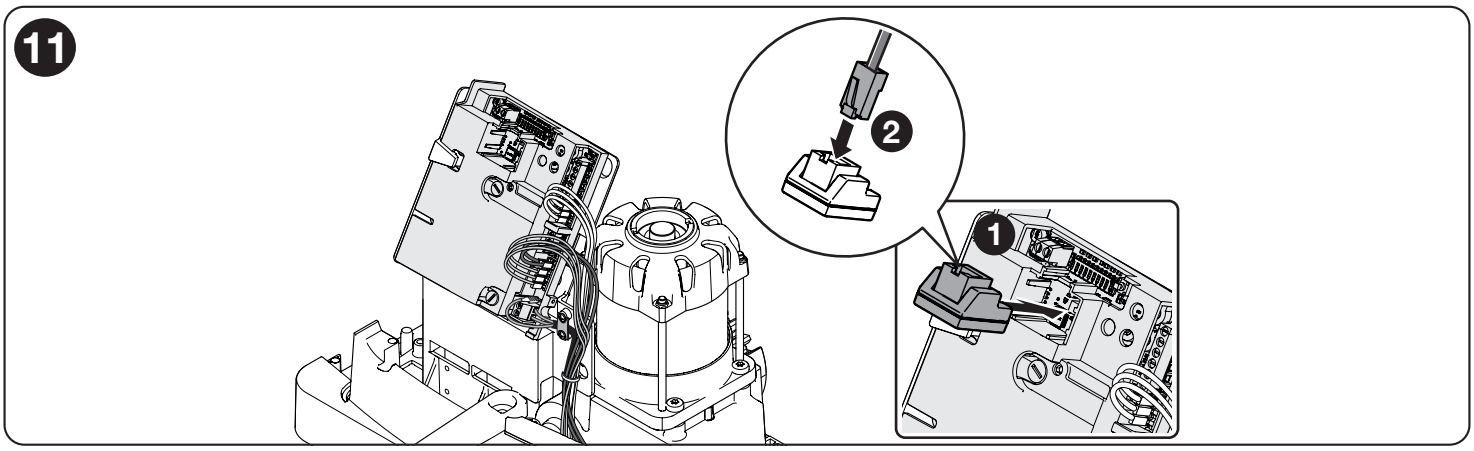

8.4 - Total deletion of the memory

When it is necessary to delete the memory completely and go back to the factory-set values, carry out the following procedure when the motor is switched off. ⚠ Caution! - The total deletion of the memory deletes the radio memory lock.

Table 14 **Procedure of total deletion of the memory**		= PROGRAM key = led OK
1	Switch the power supply to the control unit off	OFF
2	Hold down the PROGRAM key on the control unit (until step 05)	
3	Switch the power back on (continue holding the key down)	ON
4	Wait for the OK led on the control unit to come on, then wait for it to go off and finally wait for 3 flashes	OK
5	Release the key during the 3rd flashing	
⚠	If the procedure has been successful, the OK led on the control unit flashes 5 times	OK
⚠	Important - This procedure does not delete the transmitters.	

8.5 - Special functions

"Always open" function

It is a property of the control unit that allows always commanding an opening manoeuvre when the step-by-step command lasts longer than 3 seconds; useful for instance to connect the contact of a programming clock to the SbS input to keep the gate open during a certain period of time. This property is not valid if manual operation is active (switches 1-2 off-off - programmable functions - Table 5).

"Move anyway" function

If some safety device is not working or is faulty, it is possible to control and move the gate anyway in “Hold-to-run” mode. For further details, please refer to the tearout insert “USER GUIDE” (final part of the manual).

9 DIAGNOSTICS

Some devices are display messages to identify their status and faults.

9.1 - Control unit signals

The leds on the control unit issue signals to indicate their normal/faulty operation.
Table 15 lists the signals:

Table 15

OK LED	Cause	Solution
Red and green leds OFF	Serious	Check if the power is on; check fuses have not been tripped: if that is the case, check the cause of the fault and replace with others of the same value.
Red or green led ON	Serious malfunction	Try and switch the control unit off for a few seconds; if the situation does not change, there is a fault and the electronic board must be replaced.
1 green flash a second	All OK	Normal operation of the control unit.
1 red flash 1 sec. pause 1 red flash	the installation of the devices was not successful or the configuration of the 1-2 dip switches was changed without re-learning the devices	Check the correct connection of the alt and photocell inputs (see figure 7 and paragraphs 8.1.1 and 8.1.2) or if the configuration of micro switches 1-2 has been changed, perform the device learning procedure (paragraph 5.2)
2 quick green flashes	There has been a change in the input status	This is normal when there is a change in one of the inputs: SbS, STOP, triggering of photocells or the radio transmitter is used.
2 red flashes 1 sec. pause 2 red flashes	Triggering of a photocell	At the beginning of the manoeuvre, one or more photocells are preventing movement: check to see if there are any obstacles. During the closing movement it is normal if an obstacle is really present.
4 red flashes 1 sec. pause 4 red flashes	Activation of the STOP input	At the start of the manoeuvre or during the movement, the STOP input has been triggered: check the cause.
5 red flashes 1 sec. pause 5 red flashes	Internal parameter memorisation error	Wait at least 30 seconds during which the control unit tries to reset. If the situation does not change, it is necessary to delete the memory and carry out the storing procedure again
7 red flashes 1 sec. pause 7 red flashes	- Error in the internal circuits. - configuration of programming switches 1 and 2 changed	Disconnect all the power circuits for a few seconds, then try again and send a command; if the situation does not change there may be a serious fault on the board or on the motor wiring: check and replace as required. If the configuration of switches 1 and 2 has been modified, repeat the device learning procedure or reset the previous configuration
8 red flashes 1 sec. pause 8 red flashes	Command already present.	Another command is already present. Remove the command to be able to send more.
PHOTO led	**Cause**	**Solution**
Off	Photocell input activated	At the start of the manoeuvre, one or more photocells are preventing movement; check to see if there are any obstacles, also check the NC connection for faults.
On	All OK	The photocell is aligned and the movement is permitted
STOP led	**Cause**	**Solution**
Off	Activation of the STOP input	Check the devices connected to the STOP input
On	All OK	STOP Input active
SbS led	**Cause**	**Solution**
Off	Step-by-step command not present	
On	Step-by-step command present	
FCA led	**Cause**	**Solution**
Off	FCA limit switch input triggered	
On	FCA limit switch input closed	
FCC led	**Cause**	**Solution**
Off	FCC limit switch input triggered	
On	FCC limit switch input closed	
RADIO led R	**Cause**	**Solution**
Off	During normal operation, it shows a radio code that is not in the memory has been received.	
On	Radio transmitter programming or deletion in progress	

10 TROUBLESHOOTING GUIDE

In case of malfunction due to problems during installation of failure of parts, refer to Table 16:

Table 16

Problem	Solution
The radio transmitter does not control the gate and the led on the transmitter does not light up	Check to see if the transmitter batteries are exhausted, if necessary replace them
The radio transmitter does not control the gate but the led on the transmitter lights up	Check to see if the transmitter has been memorised correctly in the radio receiver. Check that the emission of the transmitter radio signal is correct by means of this empirical test: push a key and rest the LED on the aerial of a normal radio (ideally an economical one) that is switched on and tuned in, as close as possible, to 108.5Mhz FM; a slight crackling sound should be heard
No manoeuvre starts and the OK LED fails to flash.	Check that the product is being supplied 230 V mains power Check to see if fuses F1 and F2 (fig. 7) have blown; if necessary, identify the reason for the failure and then replace the fuses with others that have the same current rating and specs
No manoeuvre starts and the flasher is off	Check that the command is actually received: if the command reaches the Step-by-Step input, the OK led flashes twice to indicate that the command has been received

11 DISPOSAL OF THE PRODUCT

This product constitutes an integral part of the automation system, therefore it must be disposed of together with the former.
As in installation, also at the end of product lifetime, the disassembly and scrapping operations must be performed by qualified personnel.
This product is made up of different types of material, some of which can be recycled while others must be disposed of. Seek information on the recycling and disposal systems envisaged by the local regulations in your area for this product category.

⚠ CAUTION! – Some parts of the product may contain polluting or hazardous substances which, if disposed of into the environment, constitute serious environmental and health risks.

As indicated by the symbol, the product must not be disposed of as domestic waste. Sort the materials for disposal, according to the methods envisaged by current legislation in your area, or return the product to the retailer when purchasing an equivalent product.

⚠ CAUTION! - Local legislation may include the application of serious fines in the event of improper disposal of this product.

12 MAINTENANCE

To keep the system safe and ensure a long service life, it must be serviced regularly: at most every 6 months or after 20,000 movements since the last service.

⚠ CAUTION! – The maintenance operations must be performed in strict compliance with the safety directions provided in this manual and according to applicable legislation and standards.

01.	OFF	Check for any deterioration in automation system components, paying special attention to erosion or oxidation of the structural parts. Replace any parts which are below the required standard.
02.	Check the wear and tear on the moving parts: pinion, rack and the gate components; if necessary replace them	
03.	ON	Run all the tests and checks indicated in par. 6.1 - Testing.

13 TECHNICAL SPECIFICATIONS

⚠ All technical specifications stated herein refer to an ambient temperature of 20° C (± 5° C). • Nice S.p.a. reserves the right to apply modifications to products at any time when deemed necessary, maintaining the same intended use and functionality.

	ROBO600
Type	Electromechanical gear motor for the automatic movement of sliding gates for residential use, complete with electronic control unit
Pinion Z	15; Modulus: 4; Pitch: 12.5 mm; Primitive diameter: 60 mm
Peak thrust	18 Nm
Nominal torque	9 Nm
Speed (no load)	11 m/min
Nominal torque speed	8.5 m/min
Operating cycles	20 cycles/hour
Maximum continuous operating time	4 minutes
Nominal power supply	230 V - 50/60 Hz
Nominal power	300 W
Stand-By mode	Factory-set to automatic after 5 minutes from the end of main functions
Standby (W)*	< 0,45
Electrical isolation class	1 (a safety grounding system is required)
Flasher output	For 1 flasher 230V~ auto-intermittent (max 60W)
STOP input	For NO, NC e 8k2 contacts (a variation with respect to the status causes the command “STOP”).
Sbs input	For NO contacts (closing of the contact causes the “STEP-BY-STEP” command)
PHOTO Input	For NC contacts (a variation with respect to the closed state causes a manoeuvre reversal during the closure due to the detection of the photocell beam interruption)
Radio AERIAL Input	52 Ω for RG58 or similar type of cable
Radio receiver	Incorporated
Operating temperature	-20°C ... +55°C
Protection class	IP 44
Dimensions (mm) and weight	330 x 210 x 303 h; 11 kg
Integrated radio receiver	
Type	4 channel receiver for incorporated radio command
Frequency	433.92MHz
Transmitter compatibility	O-CODE coding
Transmitters memorized	Up to 100 if memorized in mode 1
Input impedance	52Ω
Sensitivity	better than 0.5 µV
Range of the transmitters	From 100 to 150 m, this distance can vary in the presence of obstacles and electromagnetic interference and is affected by the position of the receiving aerial
Outputs	For commands as per tables 8 and 9 of paragraph 7.3 - Integrated radio receiver
Operating temperature	-20°C ... +55°C

* In the calculation of power consumption in Standby Mode, the energy consumption of accessories has not been considered. Please refer to the respective instructions for the consumption of these accessories such as external receivers or devices connected to the power outputs, if present.

EU Declaration of Conformity and declaration of incorporation of “partly completed machinery”

Nice S.p.A. manufacturer of this equipment declares that it conforms to Directive 2014/53/EU (RED) and Directive 2006/42/EC (Machinery) according to Annex II, Part 1, Section B. The instruction manual and the complete text of the EU Declaration of Conformity can be found at: www.niceforyou.com; under ‘support’ and ‘download’.

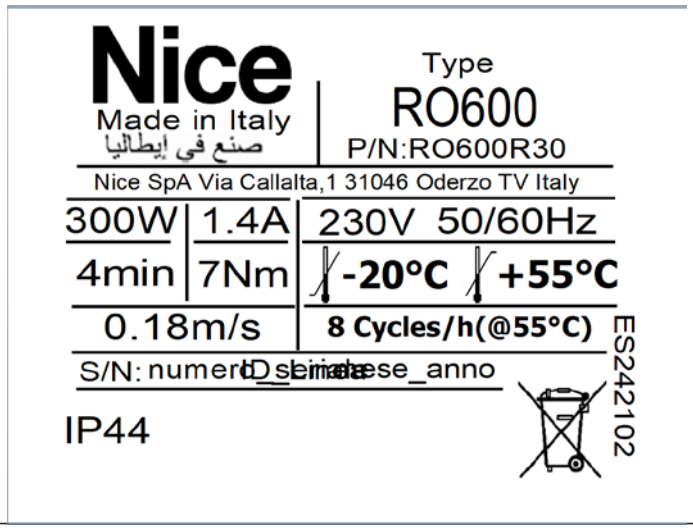

Note: The labels shown are a copy of the product label updated as of the publication date of this manual.

INSTRUCTIONS AND WARNINGS FOR USE

15.1 - WARNINGS

- Keep at a safe distance from the moving gate until it is completely open or closed; do not transit through the gate until it is completely open and has come to a standstill.
- Do not let children play near the gate or with its commands.
- Keep the transmitters away from children.
- Suspend the use of the automation immediately as soon as you notice something abnormal in the operation (noises or jolting movements); failure to follow this warning may cause serious danger and accidents.
- Do not touch moving parts.
- Regular maintenance checks must be carried out by qualified personnel according to the maintenance plan.
- Maintenance or repairs must only be carried out by qualified technical personnel.

- Send a command with the safety devices disabled:
If the safety devices do not work properly or are out of order, the gate can still be operated.
01. Command the gate with the transmitter. If the safety devices give the enable signal, the gate opens normally; otherwise, reattempt within 3 seconds and keep the control activated.
02. After approximately 2 seconds the gate will start moving in the “man present” mode, that is, so long as the control is kept activated the gate will keep moving; as soon as the control is released the gate will stop.
If the safety devices are out of order, arrange to repair the automation as soon as possible.

15.2 - Manually 🔓 releasing and locking 🔒 the gearmotor

The ROBO600 gearmotor is equipped with a mechanical system that allows for opening and closing the gate manually.
Manual operation must be performed in the case of a power outage or in the event of anomalies affecting the system.
In the event of a gearmotor fault, it is still possible to try release the motor to check whether the fault lies in the release mechanism.

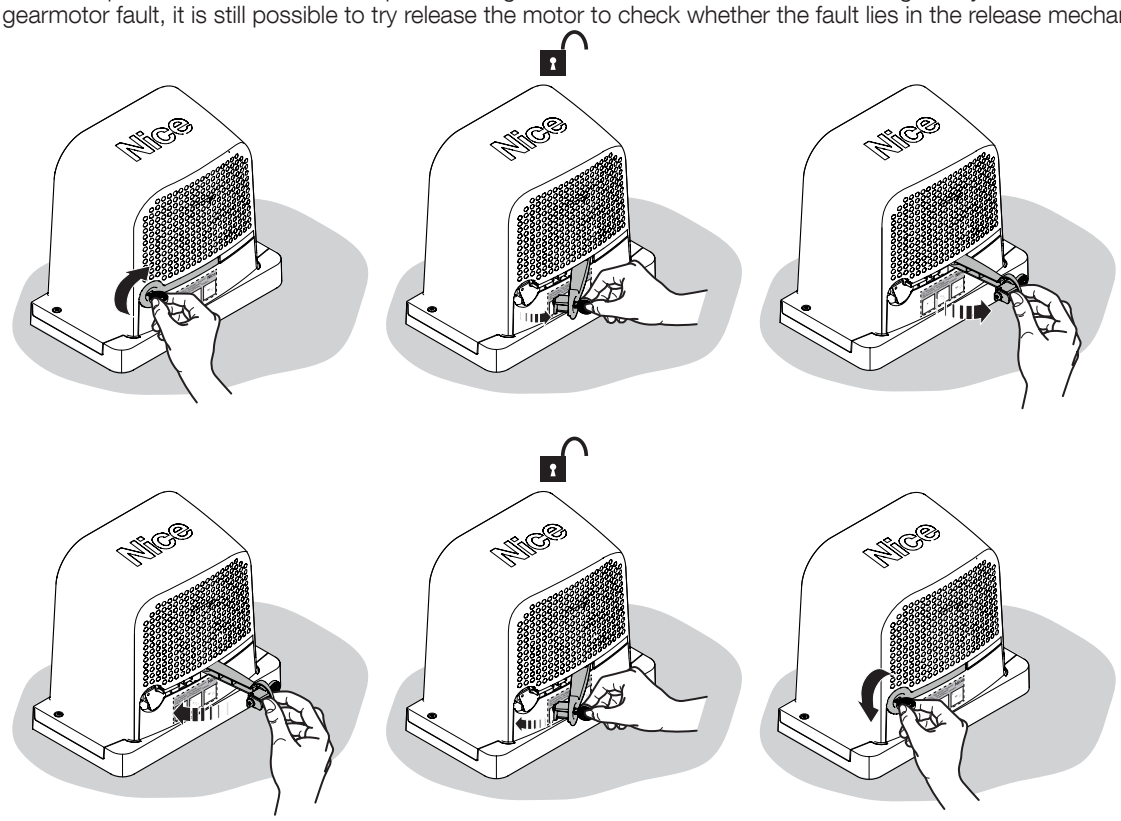

15.3 - Maintenance operations:

- Cleaning of the surfaces of the devices: use a slightly damp (not wet) cloth. Do not use substances containing alcohol, benzene, thinners or other flammable substances; the use of these substances may damage the devices and cause fires or electric shocks.
- Removal of leaves and stones: disconnect the power supply before proceeding, so as to prevent anyone from moving the gate.

15.4 - Replacing the transmitter battery

When the battery is flat, the transmitter capacity is significantly reduced. If, when a button is pressed, the relevant Led turns on then immediately fades and turns off, it means that the battery is completely flat and should be immediately replaced.
If instead the Led turns on only for a moment, it means that the battery is partially flat; the button must be kept pressed for at least half a second for the transmitter to attempt to send the command.
However, if the battery level is too low to complete the command (and possibly wait for the response), the transmitter will turn off and the relevant Led will fade. In these cases, normal transmitter operation can be restored by replacing the battery with another of the same type, while observing the relevant polarity. Consult the remote control manual for replacing the battery.

⚠ WARNINGS! - Batteries contain polluting substances: do not dispose of them together with common waste but use the methods set forth in the local regulations.

YAYDOOR www.yaydoor.com

NOTE

IDV0772A03EN_20-05-2025

Nice S.p.A.
Via Callalta, 1
31046 Oderzo (TV)
info@niceforyou.com

www.niceforyou.com