Spido

SPIDO600
SPIDO1000

CE 0682
EAC UK CA

Gearmotor for garage doors

EN - Instructions and warnings for installation and use

Nice

ENGLISH

Translation of the original instructions in full

CONTENTS

1 GENERAL SAFETY WARNINGS AND PRECAUTIONS 2
1.1 General warnings 2
1.2 Installation warnings 3
2 PRODUCT DESCRIPTION AND INTENDED USE 3
2.1 List of constituent parts 3
3 INSTALLATION 4
3.1 Pre-installation checks 4
3.2 Product usage limits 4
3.3 Product identification and overall dimensions 4
3.4 Receipt of the product 4
3.5 Pre-installation works 5
3.6 Installing the gearmotor 6
3.7 Manually unlocking and locking the gearmotor 9
4 ELECTRICAL CONNECTIONS 10
4.1 Preliminary checks 10
4.2 Wiring diagram and description of connections 11
4.2.1 Wiring diagram 11
4.2.2 Description of connections 11
5 FINAL CHECKS AND START-UP 12
5.1 Power supply connection 12
5.2 Programming the door opening and closing positions 12
5.3 Automatic force search 14
5.4 Checking the door movement 14
5.5 Inverting the direction of motor rotation 14
6 TESTING AND COMMISSIONING 15
6.1 Testing 15
6.2 Commissioning 15
7 PROGRAMMING 16
7.1 Using the programming buttons 16
7.2 Programming the control unit 16
7.3 Setting the Stand-By mode 18
7.4 Setting of the motor force 18
7.5 Setting the motor speed 18
7.6 Setting the automatic closing 19
7.7 Setting the FLASH function 19
7.8 Setting of the OUT STB operation 20
7.9 Setting the tension release 20
7.10 Setting the SbS operation 21
7.11 Memory deletion 21
7.12 Memorising the transmitters 21
7.12.1 Procedure for memorising transmitter buttons 22
7.12.2 Number of transmitters that can be memorised 22
7.12.3 Transmitter memorisation and deletion procedures 22
7.13 Locking and unlocking the memory 23
7.14 Special functions 23
7.14.1 “Always open” function 23
7.14.2 “Move anyway” function 23
8 TROUBLESHOOTING GUIDE 24
8.1 Troubleshooting 24
8.2 Signals on the control unit 25
8.3 Signalling through warning light 26
8.4 Signals with courtesy light 26
9 FURTHER DETAILS (Accessories) 27
9.1 Adding or removing devices 27
9.1.1 STOP input 27
9.1.2 Photocells with PHOTOTEST function 27
9.1.3 Electric lock 28
9.2 Connecting and installing the emergency power supply 29
9.3 Connecting the Oview programmer 30
9.4 Wi-Fi connection 30
9.4.1 BiDi-Wi-Fi interface 30
9.5 Connecting other devices 31
10 PRODUCT MAINTENANCE 31
11 PRODUCT DISPOSAL 31
12 TECHNICAL SPECIFICATIONS 32
13 CONFORMITY 33
INSTRUCTIONS AND WARNINGS 34

1 GENERAL SAFETY WARNINGS AND PRECAUTIONS

1.1 GENERAL WARNINGS

⚠ **Prior to installing the appliance, carefully read and observe these instructions, since incorrect installation can cause serious harm to people and damage to the appliance. Store them with care.**

⚠ **According to the latest European legislation, an automated device must be constructed in conformity to the harmonised rules specified in the current Machinery Directive, which allow for declaring the presumed conformity of the automation. Consequently, all the operations for connecting the product to the mains electricity, its commissioning and maintenance must be carried out exclusively by a qualified and expert technician.**

⚠ **In order to avoid any danger from inadvertent resetting of the thermal cut-off device, this appliance must not be powered through an external switching device, such as a timer, or connected to a supply that is regularly powered or switched off by the circuit.**

⚠ **Permanently affix a label or sign to the door with the following image (minimum height 60 mm) "*Figure 1*"**

1

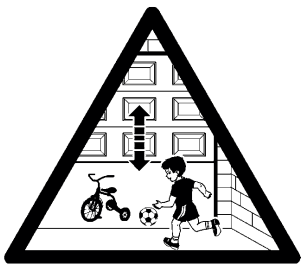

WARNING! Please abide by the following warnings:

- Before commencing the installation, check the “Product technical specifications”, in particular whether this product is suitable for automating your guided part. Should it not be suitable, do NOT proceed with the installation.
- The product cannot be used before it has been commissioned as specified in the “Testing and commissioning” chapter.
- Before proceeding with the product’s installation, check that all the materials are in good working order and suited to the intended applications.
- The product is not intended for use by persons (including children) with reduced physical, sensory or mental capacities, nor by anyone lacking sufficient experience or familiarity with the product.
- Children must not play with the appliance.
- Do not allow children to play with the product’s control devices. Keep the remote controls out of reach of children.

- The system's power supply network must include a disconnection device (not supplied) with a contact opening gap permitting complete disconnection under the conditions envisaged by Overvoltage Category III.
- Handle the product with care during installation, taking care to avoid crushing, denting or dropping it, or allowing contact with liquids of any kind. Keep the product away from sources of heat and naked flames. Failure to observe the above can damage the product, and increase the risk of danger or malfunction. Should this happen, stop installation immediately and contact Customer Service.
- The manufacturer declines all liability for damages to property, objects or people resulting from failure to observe the assembly instructions. In such cases, the warranty for material defects shall not apply.
- The weighted sound pressure level of the emission A is lower than 70 dB(A).
- Cleaning and maintenance reserved for the user must not be carried out by unsupervised children.
- Before intervening on the system (maintenance, cleaning), always disconnect the product from the mains power supply and from any batteries.
- Inspect the system frequently, in particular the cables, springs and supports to detect any imbalances and signs of wear or damage. Do not use the product if it needs to be repaired or adjusted, because defective installation or incorrect balancing of the automation can lead to injuries.
- The packing materials of the product must be disposed of in compliance with local regulations.
- The product must not be installed outdoors.
- Keep an eye on moving doors and do not let anyone go near them until they have opened or closed fully.
- Be careful when activating the manual unlocking device (manual manoeuvre), as an open door may fall suddenly due to weak or broken springs, or if it is unbalanced.
- Every month, check that the drive motor reverses when the door encounters a 50 mm-high object placed on the ground. If necessary, readjust the door and check it again, as incorrect adjustment is potentially dangerous (for drive motors incorporating a trapping safety system that intervenes when the door's lower edge encounters an obstacle).
- If the power cable is damaged, it **must be replaced** by the manufacturer or by its technical assistance service or similarly qualified person in order to prevent any form of risk.

1.2 INSTALLATION WARNINGS

- Prior to installing the drive motor, check that the door is in good working order, correctly balanced and that it opens and closes properly.
- Before installing the drive motor, remove all unnecessary ropes or chains and deactivate any equipment not required for motorised operation, such as locking devices.
- Install the manoeuvre device for manual unlocking at less than 1.8 m above the ground. NOTE - If removable, the manoeuvre device must be kept next to the door when removed.
- Make sure that the control elements are kept far from moving parts but nonetheless directly within sight. Unless a selector is used, the control elements must be installed at least 1.5 m above the ground and must not be accessible.
- Permanently attach the trapping hazard warning labels in a highly visible location or near the fixed control devices (if present).
- Permanently attach the manual unlock (manual manoeuvre) label close to the manoeuvring element.
- After installation, make sure that the motor prevents or stops opening of the door when the latter is loaded with a 20-kg weight secured to the centre of its bottom edge (for drive motors that can be used with doors having opening widths exceeding 50 mm).
- WARNING! After installation, make sure that the mechanism is properly adjusted and that the motor reverses when the door collides with a 50 mm-tall object placed on the ground (for drive motors incorporating a trapping safety system that intervenes when the bottom edge of the door encounters an obstacle). Following installation, check and ensure that no door parts obstruct public roadways or pavements.

2 PRODUCT DESCRIPTION AND INTENDED USE

SPIDO is an electromechanical actuator for automating sectional doors and protruding and non-protruding overhead doors.
For the application with non-protruding overhead doors, or protruding overhead doors without springs, it is necessary to use the SPA5 accessory, which is not supplied.
The control unit supplied with the product, besides powering the DC motor, ensures optimal adjustment of the gearmotor torque and speed, precise measurement of the positions, gradual starting and closing, and obstacle detection. It is also equipped with an internal meter which allows for recording of the manoeuvres performed by the gearmotor during its lifetime.
The unlocking mechanism, activated from the ground, disengages the motor carriage from the guide.
This product complies with the criteria envisaged in the "Stand-By" regulation. The product enters the Stand-By mode 5 minutes after the end of a manoeuvre that terminated correctly.

CAUTION! – Any use other than that specified herein or in environmental conditions other than those stated in this manual is to be considered improper and is strictly forbidden!

2.1 LIST OF CONSTITUENT PARTS

"***Figure 2***" shows the main parts making up **SPIDO**.

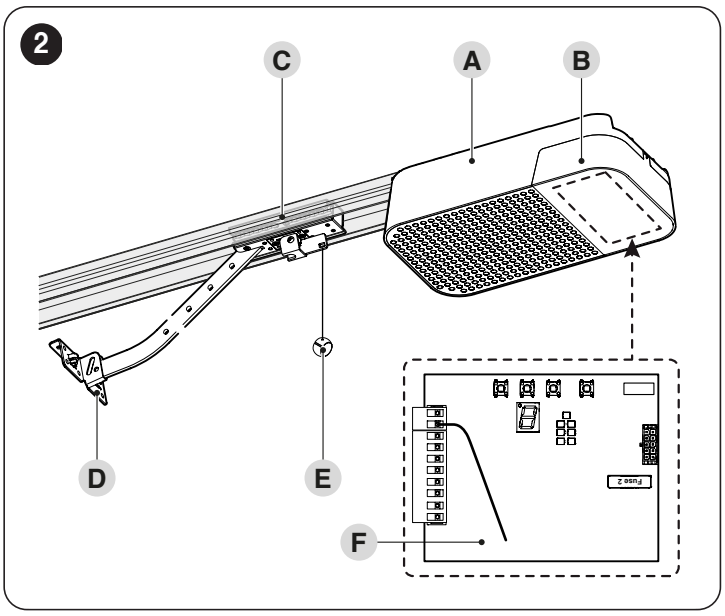

A Gearmotor body
B Cover
C Motor carriage
D Drawbar
E Locking/unlocking system
F Control unit

3 INSTALLATION

3.1 PRE-INSTALLATION CHECKS

The installation must be carried out by qualified personnel in compliance with the current legislation, standards and regulations, and with the instructions provided in this manual.

Before proceeding with the product's installation, it is necessary to:
- check the integrity of the supply
- check that all the materials are in good working order and suited to the intended use
- make sure that the structure of the door is suitable for being automated
- make sure that the characteristics of the door fall within the operating limits specified in the "***Product usage limits***" paragraph (page 4)
- verify that there are no points of greater friction during the opening and closing movements along the entire door path
- verify that the area where the gearmotor is installed allows for unlocking the latter and manoeuvring easily and safely
- Verify that the mounting points of the various devices are protected against impacts and that the mounting surfaces are sufficiently sturdy
- Components must never be immersed in water or other liquids
- Keep the product away from heat sources and open flames and acid, saline or potentially explosive atmospheres; these may damage the product and cause malfunctions or dangerous situations
- Connect the control unit to an electricity supply line equipped with a safety earthing system
- Mount a device on the electric power line that completely disconnects the automation from the grid. The disconnection device must have contacts with a sufficient gap to ensure complete disconnection, under the Category III overvoltage conditions, in accordance with the installation instructions. Should it be necessary, this device guarantees fast and safe disconnection from the power supply; it must therefore be positioned in view of the automation. If placed in a non-visible location, it must have a system that blocks any accidental on unauthorised reconnection of the power supply, in order to prevent dangerous situations. The disconnection device is not supplied with the product.

3.2 PRODUCT USAGE LIMITS

The data relative to the product's performances is included in the "***TECHNICAL SPECIFICATIONS***" chapter (page 32) and is the only data that allows for properly assessing whether the product is suitable for its intended use.
Check the application limits of **SPIDO** and of the accessories to be installed, assessing whether their characteristics are capable of meeting the requirements of the environment and the limitations specified below:
- the door dimensions must be below 10,5 m^2
- the weight of the door must not exceed 110 kg
- the wall-mounting bracket must be sufficiently long.

Table 1

SPIDO - LIMITATIONS OF USE IN RELATION TO THE TYPE OF DOOR

Model	Type of guide	Sectional doors	Non-protruding overhead door (with accessory SPA5)	Protruding overhead door (with accessory SPA5) Overhead with springs (without accessory SPA5)
SPIDO600	SR32/16	3,7 x 2,6 m (W x H) [9,62 mq]	3,5 x 2,4 m (W x H) [8,4 mq]	3,5 x 3 m (W x H) [10,5 mq]
	SR32/16 + SR08 or SR40	2,9 x 3,4 m (W x H) [9,86 mq]	2,7 x 3,4 m (W x H) [9,18 mq]	3 x 3,6 m (W x H) [10,8 mq]
SPIDO1000	SR32/16	4,9 x 2,6 m (W x H) [12,7 mq]	4,5 x 2,4 m (W x H) [10,8 mq]	4,6 x 3 m (W x H) [13,8 mq]
	SR32/16 + SR08 or SR40	3,9 x 3,4 m (W x H) [13,2 mq]	3,4 x 3,4 m (W x H) [11,5 mq]	3,8 x 3,6 m (W x H) [13,6 mq]

The measurements shown in "***Table 1***" are purely indicative and are only needed for making a rough estimate. The actual suitability of **SPIDO** for automating a specific door depends on the degree of leaf balancing, guide friction and other aspects, including occasional events such as wind pressure or the presence of frost, which could obstruct the leaf's movement.
To determine the actual conditions, the force required to move the leaf throughout its path must be measured, to ensure that this value does not exceed the "rated torque" specified in the "***TECHNICAL SPECIFICATIONS***" chapter (page 32).

The control unit is equipped with a manoeuvre limiting device that prevents possible overheating; it is based on the motor load and duration of the cycles, and intervenes when the maximum limit is exceeded.

3.3 PRODUCT IDENTIFICATION AND OVERALL DIMENSIONS

The overall dimensions of the product are shown in "***Figure 3***".

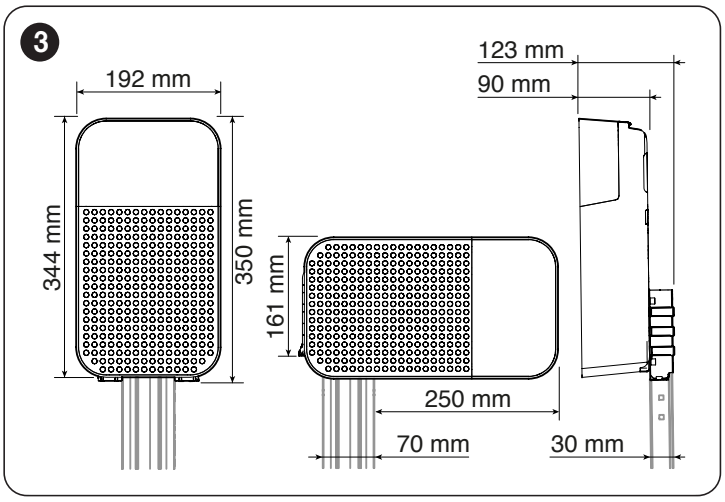

3.4 RECEIPT OF THE PRODUCT

All the components contained in the kit are illustrated and listed below.

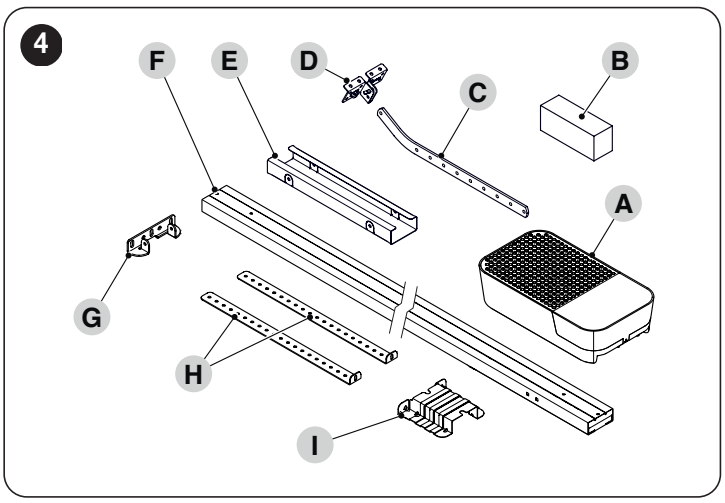

A Gearmotor
B Unlocking system and metal hardware (screws, washers, etc.)
C Drawbar
D Door mounting bracket
E Joining element for guide (in case of a 2-piece guide)
F Assembled / pre-assembled guide
G Wall mounting bracket
H Ceiling mounting bracket
I Motor mounting bracket

3.5 PRE-INSTALLATION WORKS

The figure shows an example of an automation system, constructed using **Nice** components.

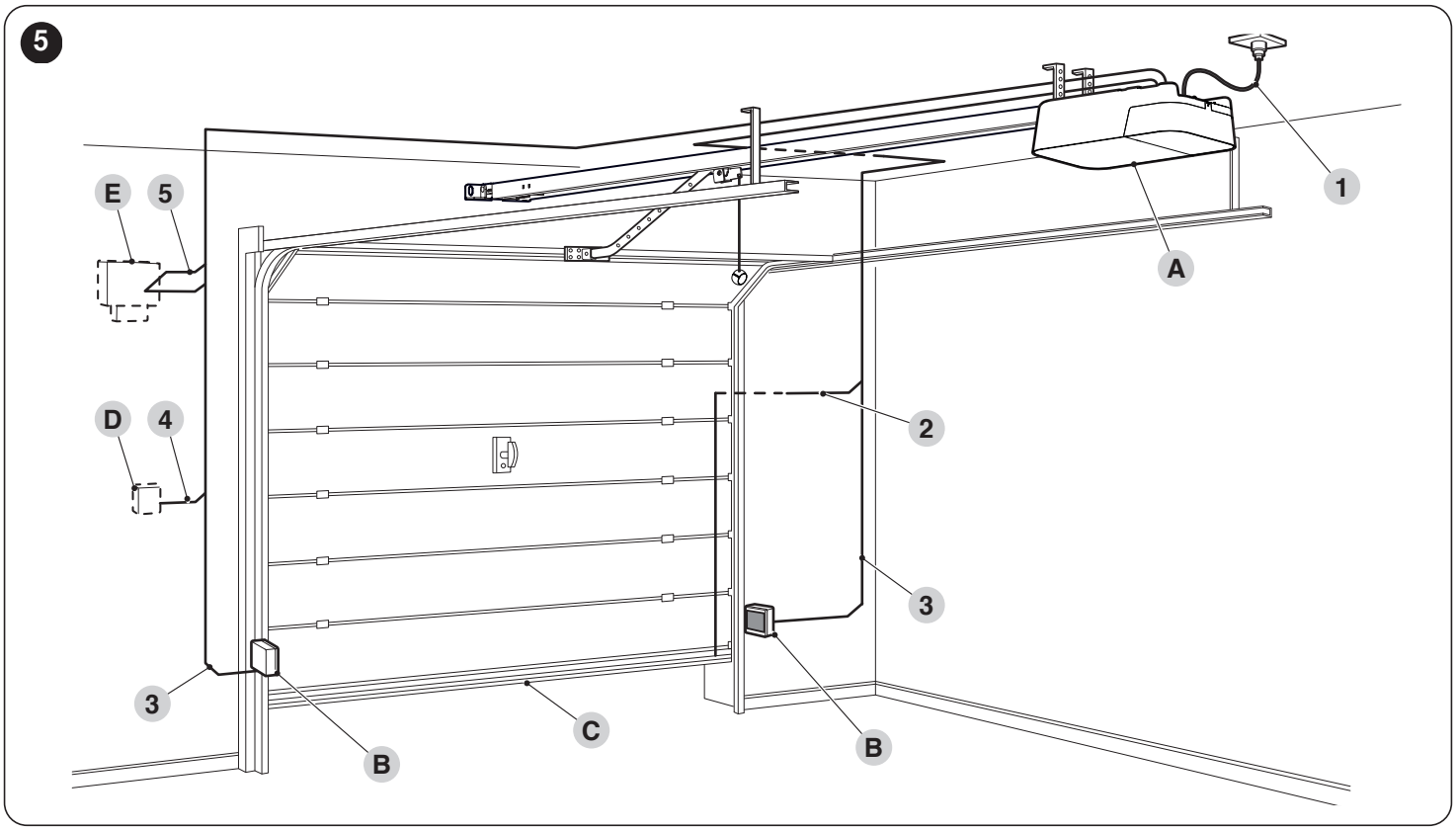

A Gearmotor
B Photocells
C Main edge
D Key selector
E Warning light with incorporated antenna

The above-mentioned components are positioned according to a typical standard layout. Using the layout shown in "***Figure 5***" for reference, define the approximate position in which each component of the system will be installed.

Table 2

TECHNICAL SPECIFICATIONS OF ELECTRICAL CABLES	
Identification no.	**Cable characteristics**
1	GEARMOTOR POWER SUPPLY cable 1 cable 3 x 1.5 mm² Maximum length 30 m [**note 1**]
2	MAIN EDGE cable 1 cable 2 x 0.5 mm² Maximum length 20 m
3	PHOTOCELL cable 1 cable 4 x 0.5 mm² Maximum length 30 m
4	KEY SELECTOR cable 2 cables 2 x 0.5 mm² [**note 2**] Maximum length 50 m
5	WARNING LIGHT cable 1 cable 2 x 0.5 mm² Maximum length 20 m
	ANTENNA cable 1 x RG58-type shielded cable Maximum length 10 m; recommended < 5 m

Note 1 If the power supply cable is longer than 30 m, a cable with larger cross-sectional area (3 x 2.5 mm²) must be used and a safety earthing system must be installed near the automation.

Note 2 These two cables can be replaced by a single 4 x 0.5 mm² cable.

Before proceeding with the installation, prepare the required electrical cables by referring to "*Figure 5*" and to that stated in the "*TECHNICAL SPECIFICATIONS*" chapter (page 32).

The cables used must be suited to the type of environment of the installation site.

When laying the pipes for routing the electrical cables, take into account that any water deposits in the junction boxes may cause the connection pipes to form condensate inside the control unit, thus damaging the electronic circuits.

"***Figure 6***" shows typical installations for a protruding and non-protruding overhead door.

For installation on protruding and non-protruding doors, accessory SPA5 is required.

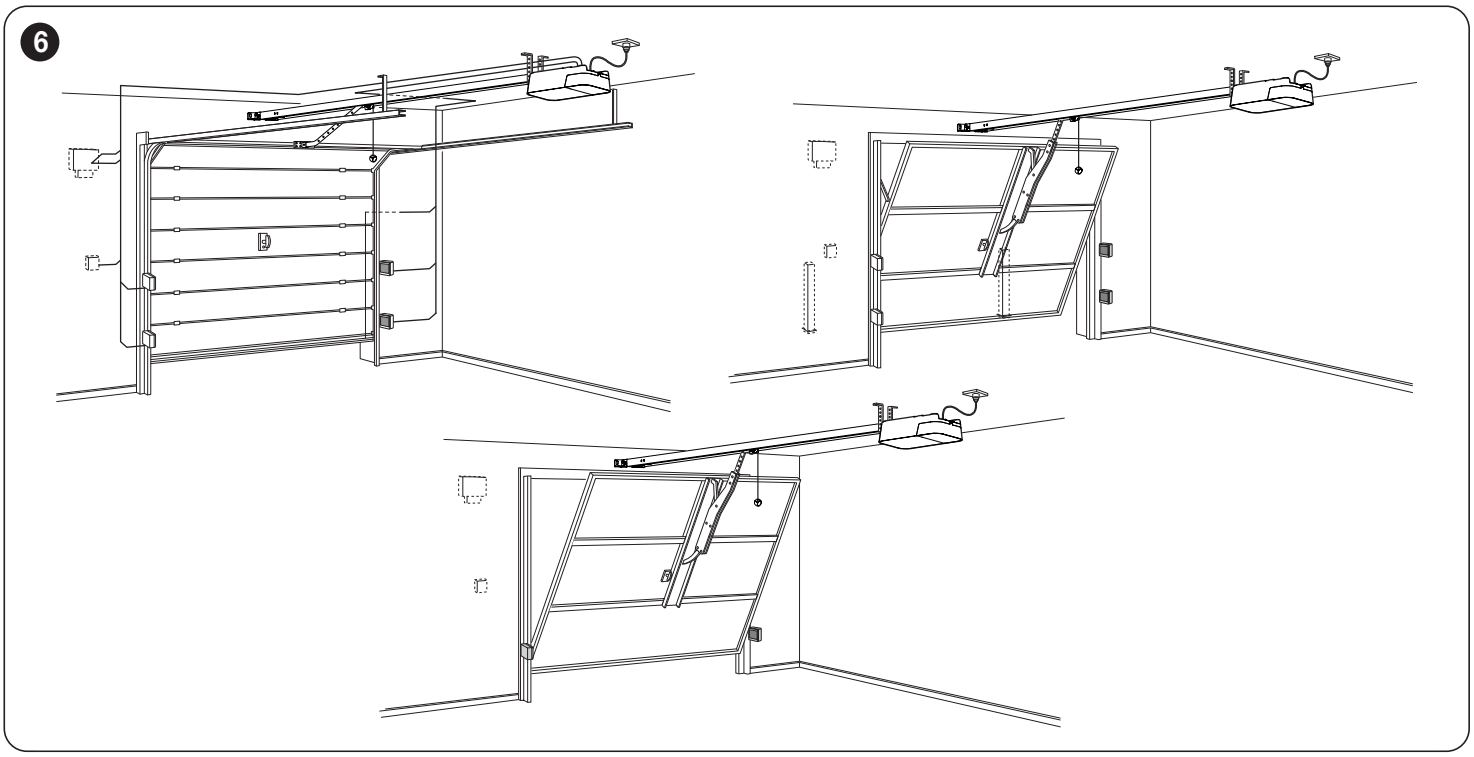

If the door to be automated is an overhead type, check whether distance E in "***Figure 7***" is observed, which refers to the minimum distance between the upper side of the guide and the maximum point reached by the upper edge of the door. If not, the gearmotor cannot be installed.

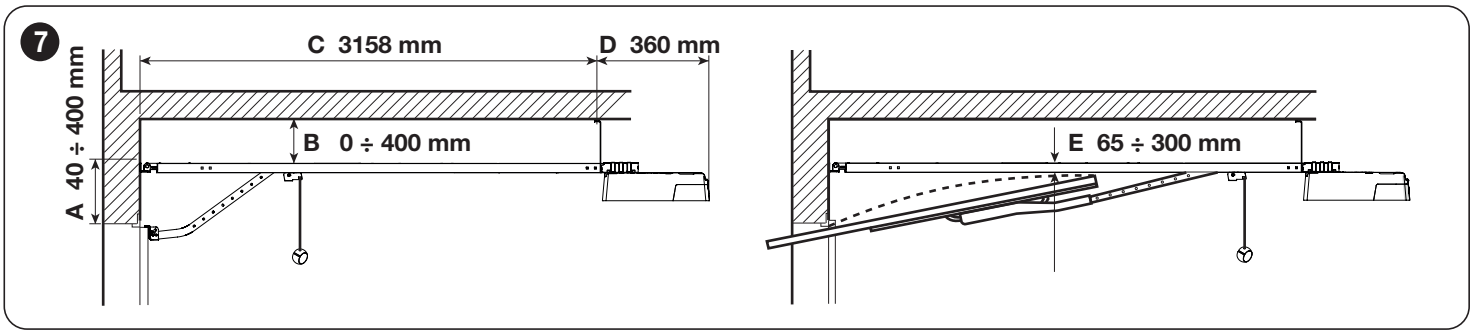

3.6 INSTALLING THE GEARMOTOR

Incorrect installation may cause serious physical injury to the person working on the system or to its future users.

Before starting to assemble the automation, complete the preliminary checks described in the "*Pre-installation checks*" paragraph (page 4) and the "*Product usage limits*" paragraph (page 4).

The automation must be installed EXCLUSIVELY WITH THE DOOR CLOSED.

To install **SPIDO**:

1. if you have an entire guide, skip directly to the operations illustrated in ***Figure 12***
2. assemble the guide by sliding the two ends (**A**) into the joining element (**B**) until they touch ("***Figure 8***")

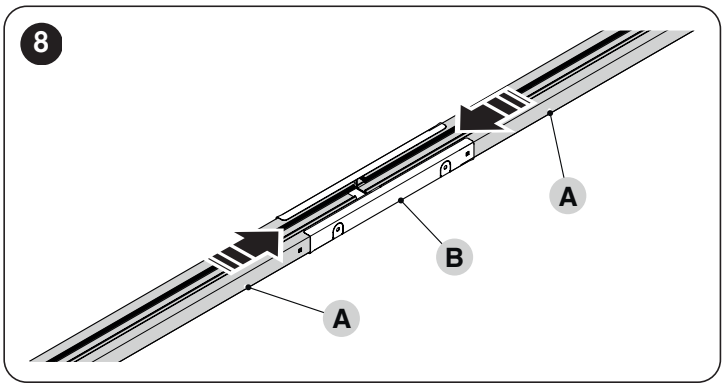

3. If the guide must be fastened in an intermediate position, it is possible to use the 4 tabs (**C**) present on the joining element.To do this, simply turn the tabs by 90 or 180° (**D**) ("***Figure 9***")

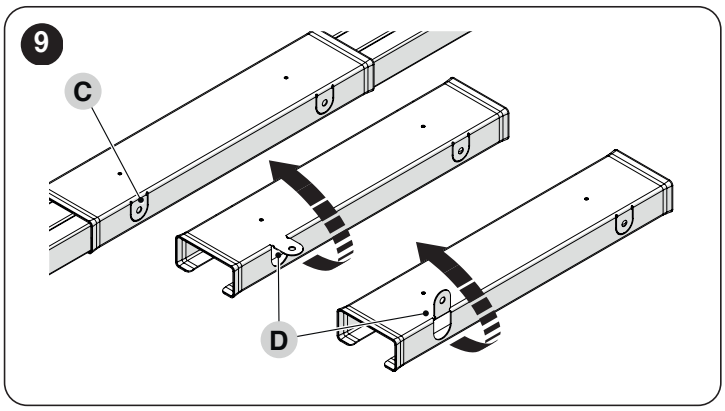

4. insert the bracket (**E**) into the screw (**C**) and then make it slide inside the guide
5. insert the spring, washer and nut (**F**) onto the screw (**C**) ("***Figure 10***")

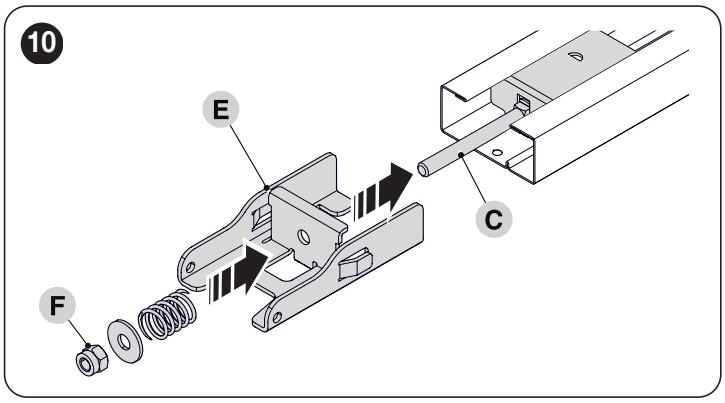

6. slide the head (**G**) to the end of the guide
7. turn the guide over and lock the head (**G**) using the screws provided ("***Figure 11***")

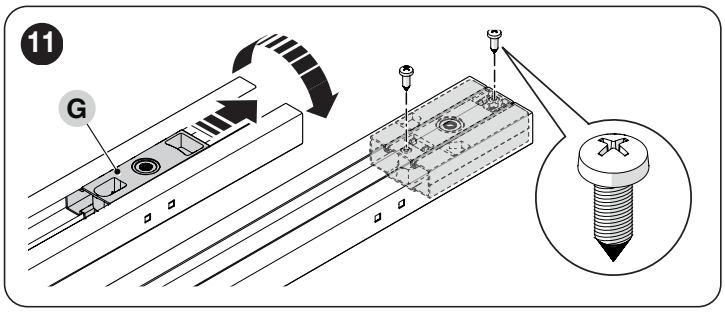

8. turn the nut (**F**) to tension the belt ("***Figure 12***")

An excessively taut belt could cause the gearmotor to break, while an excessively slack belt could cause unpleasant noises.

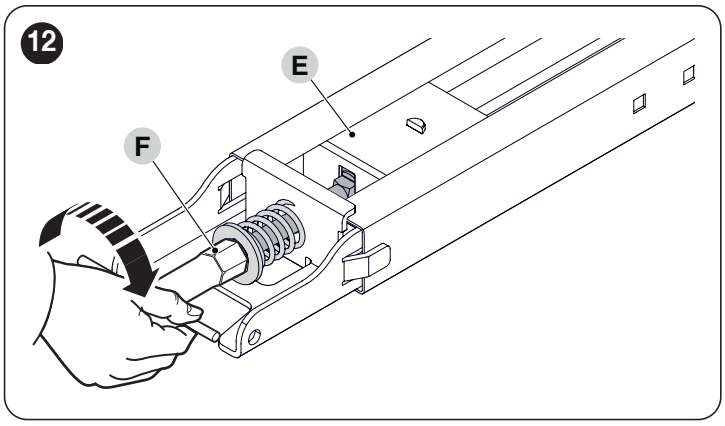

9. insert the motor pin (**H**) into the head (**G**)
10. position the drawbar (**I**) and fasten it with the four screws ("***Figure 13***")

The motor can also be mounted at 90° with respect to the guide axis.

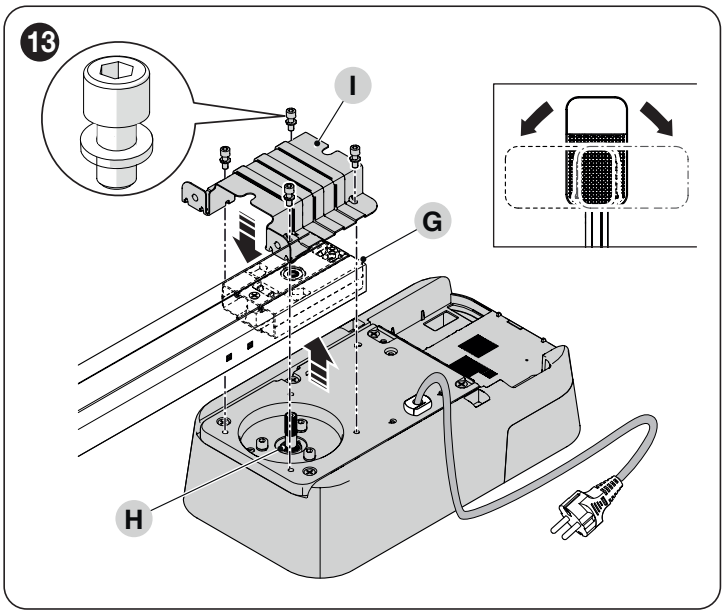

11. from the opening side of the door, position the wall mounting bracket (**J**) on the guide and lock it by inserting the pin and cotter pin ("***Figure 14***")

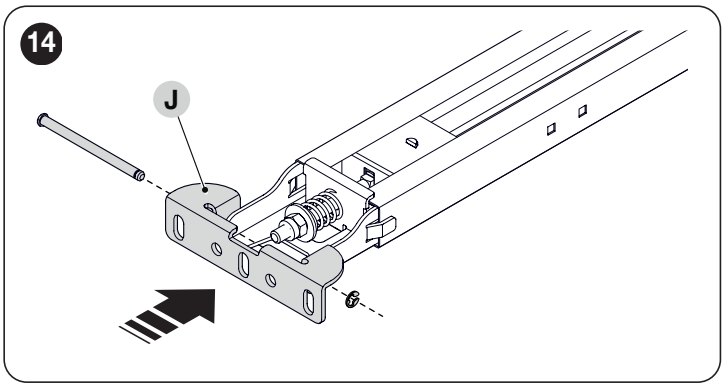

12. mount the door mounting bracket (**K**) on the drawbar (**L**)
13. insert the relevant pin (**M**) into the drawbar and lock it in place with the cotter pin (**N**) ("***Figure 15***")

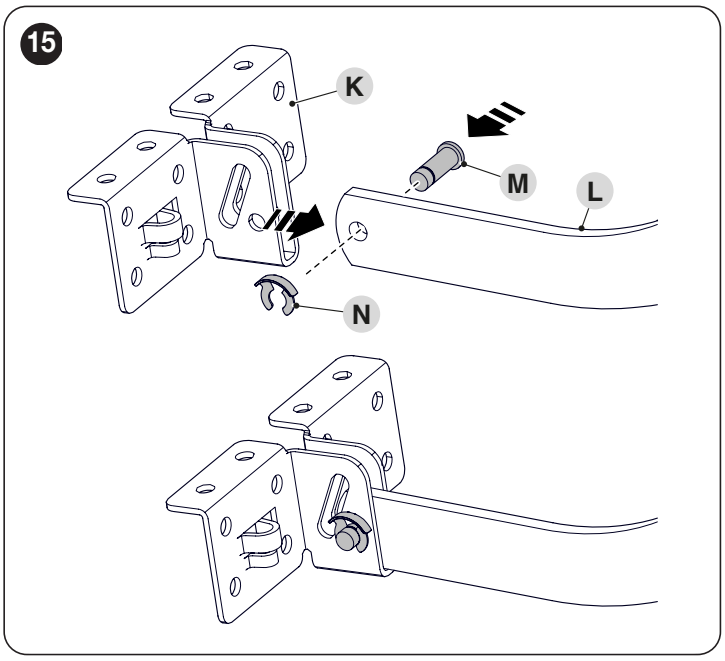

14. mount the pin (**O**) onto the drawbar (**L**)
15. attach the drawbar to the motor carriage (**P**)
16. lock the bracket in place using the two screws ("***Figure 16***")

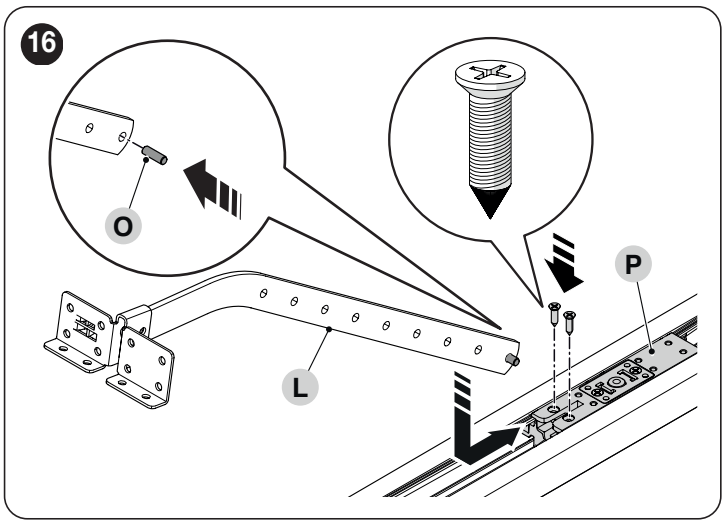

Verify that the distances chosen for installing the product are compatible with the limit distances (see "*Figure 7*").

17. fasten the wall mounting bracket (**J**) to the wall above the door or to the ceiling ("***Figure 17***")

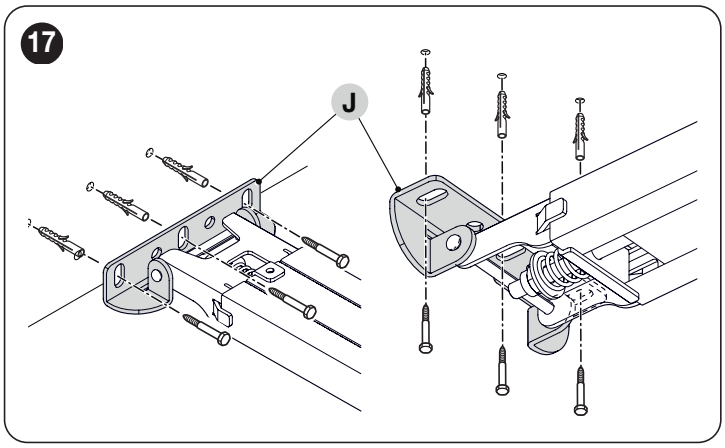

18. use two screws to fasten the ceiling mounting brackets (**Q**) while observing the desired distance ("***Figure 18***")

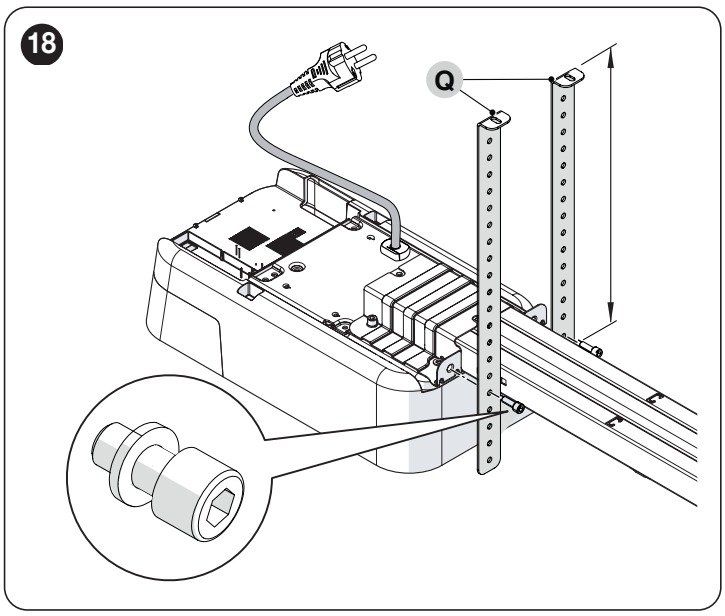

19. using a ladder, lift the gearmotor until the brackets touch the ceiling
20. mark the drilling points and then put the gearmotor back on the ground ("***Figure 19***")

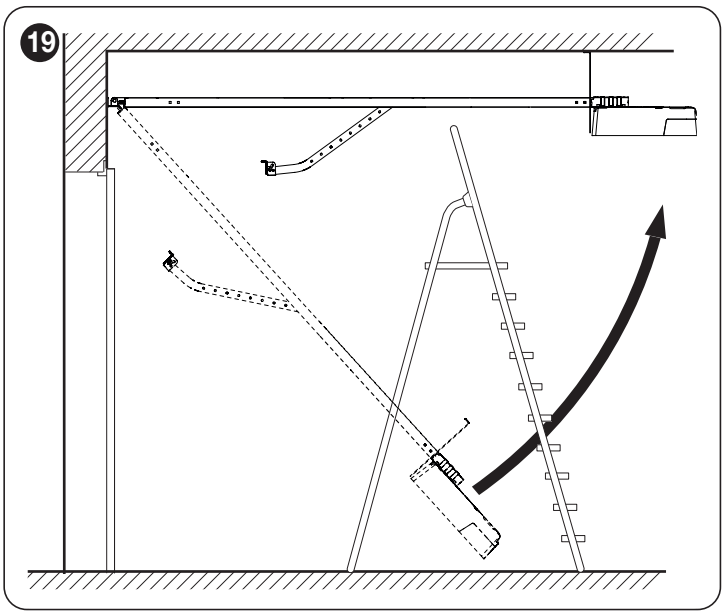

21. drill through the marked points
22. using a ladder, lift the gearmotor until the brackets rest against the drilled holes
23. fasten them using screws and plugs suited to the relevant material ("***Figure 20***")

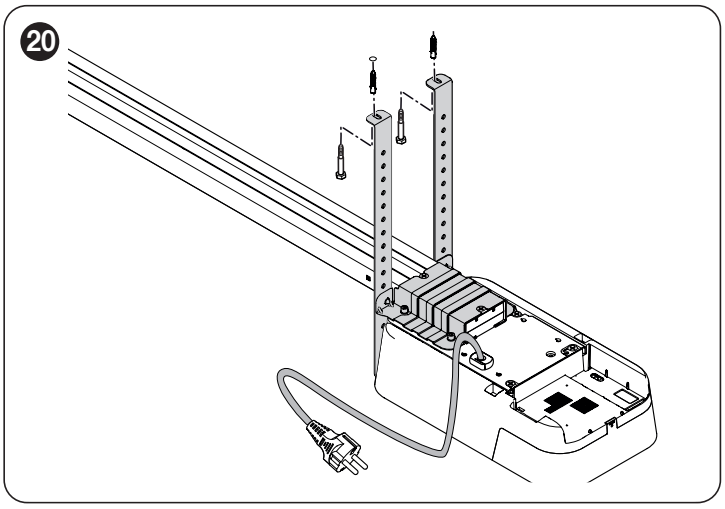

24. ensure that the guide lies perfectly horizontal, then cut off the excess section of the brackets with a saw ("***Figure 21***")

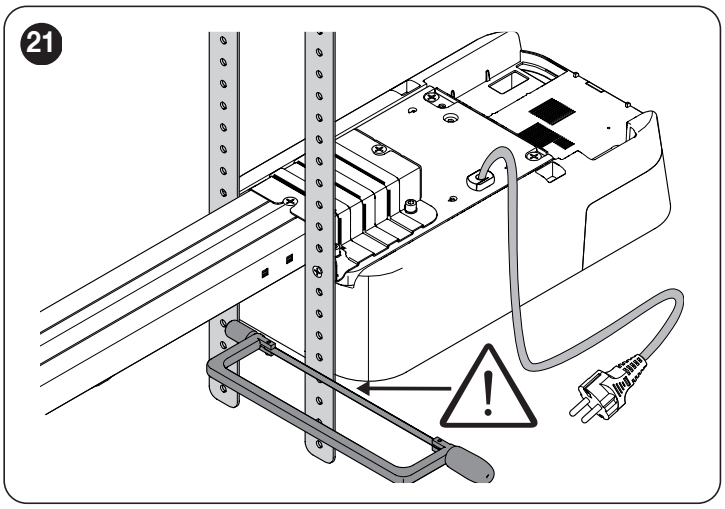

25. assemble the unlocking system (**S**) by tightening the screw (**V**) and placing the spring washer (**R**) in between ("***Figure 22***")

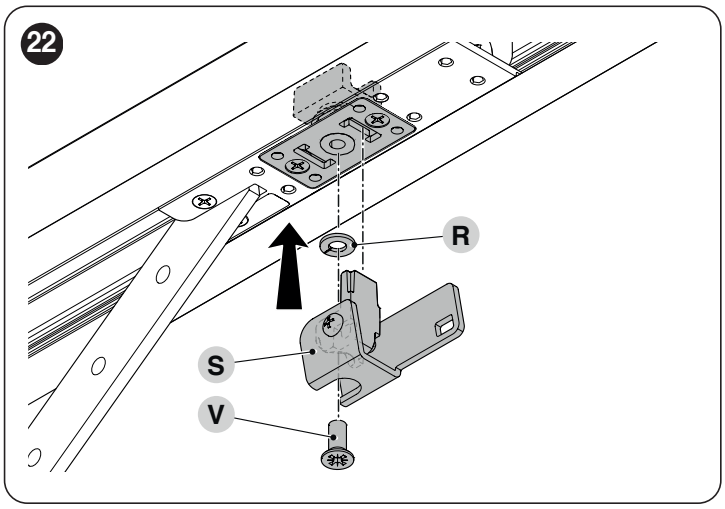

26. fasten the cord (**C**) and the relevant unlocking ball to the unlocking system (**S**)
27. with the door closed, pull the cord (**C**) to release the carriage ("***Figure 23***")

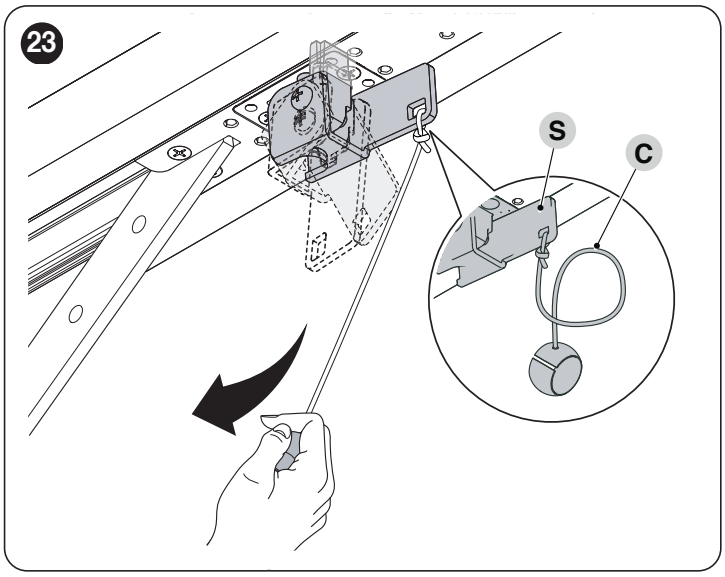

28. slide the motor carriage until the door mounting bracket (**K**) on the upper edge of the door lies exactly perpendicular to the guide (**A**)
29. fasten the bracket (**K**) using the screws and rivets suited to the door material and the force required to move the door itself ("***Figure 24***")

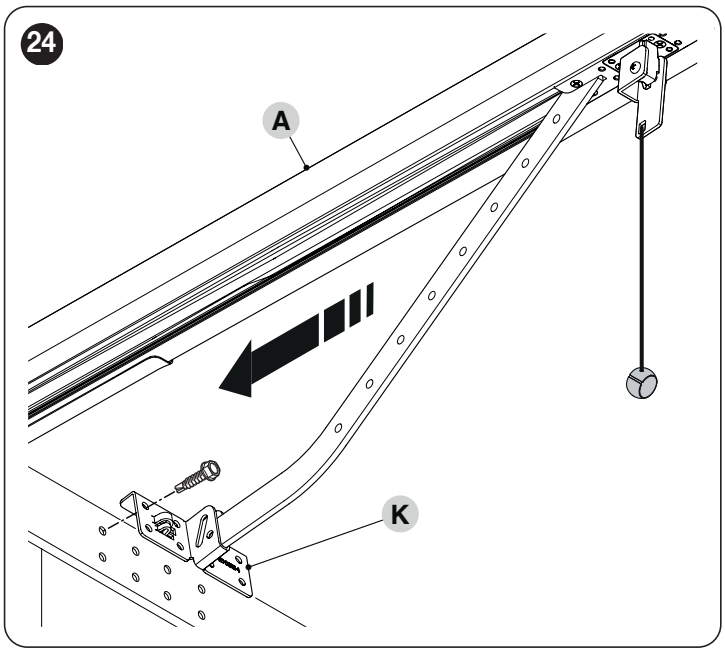

3.7 MANUALLY UNLOCKING AND LOCKING THE GEARMOTOR

The gearmotor is equipped with a mechanical unlocking device that can be used to open and close the door manually.
These manual operations should only be performed in case of a power outage, malfunctions or during the installation phases.
To unlock the device:

1. pull the releasing cord (**A**) ("***Figure 25***")

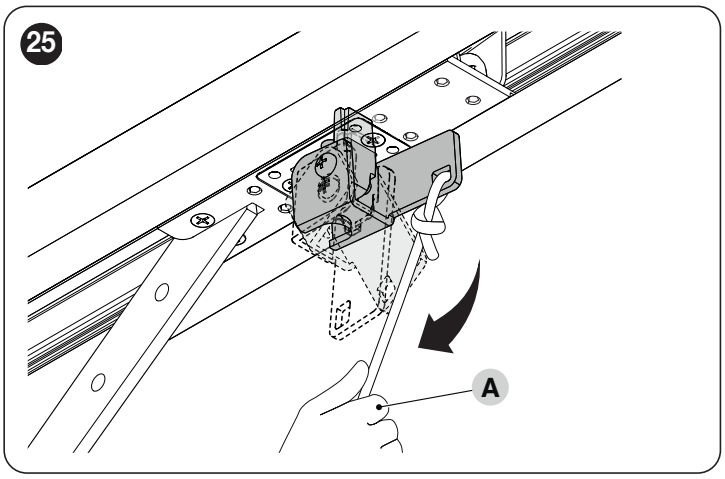

2. the door can now be moved manually to the desired position.

To lock the device:

1. pull the releasing cord (**A**) ("***Figure 26***")

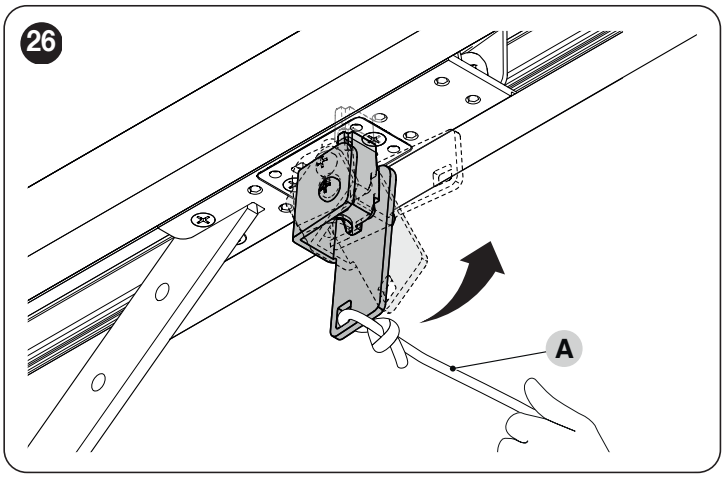

2. manually move the door to align the lower part of the motor carriage with the upper part so that it slots into place.

4 ELECTRICAL CONNECTIONS

4.1 PRELIMINARY CHECKS

All electrical connections must be made with the system disconnected from the mains electricity and with the emergency power supply (if present in the automation) disconnected.

The connection operations must only be carried out by qualified personnel.

To make the electrical connections:

1. loosen the screw (**A**)
2. pull the cover (**B**) slightly outwards and turn it downwards ("***Figure 27***")

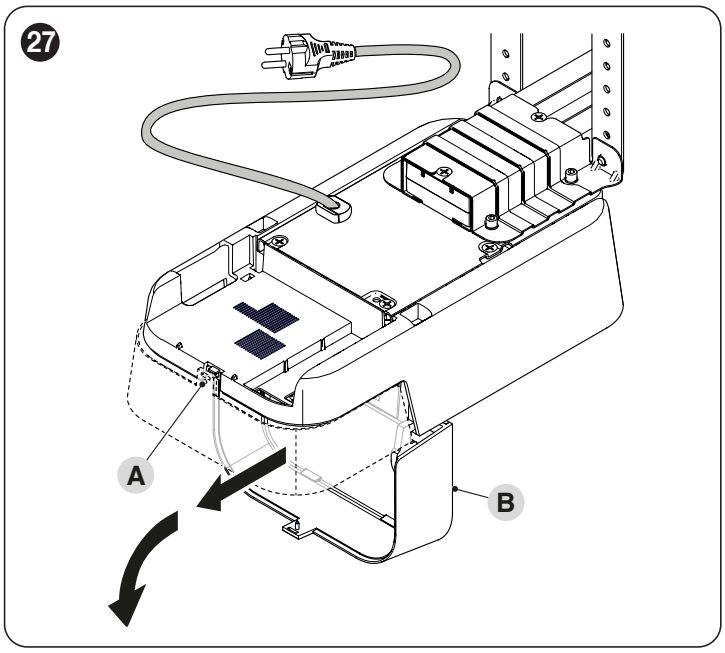

3. insert all the connecting cables into the various devices, leaving them 20–30 cm longer than necessary. Refer to "***Table 2***" for the type of cables and to "***Figure 29***" for the connections.
4. use a cable tie to group all the cables entering the gearmotor ("***Figure 28***")

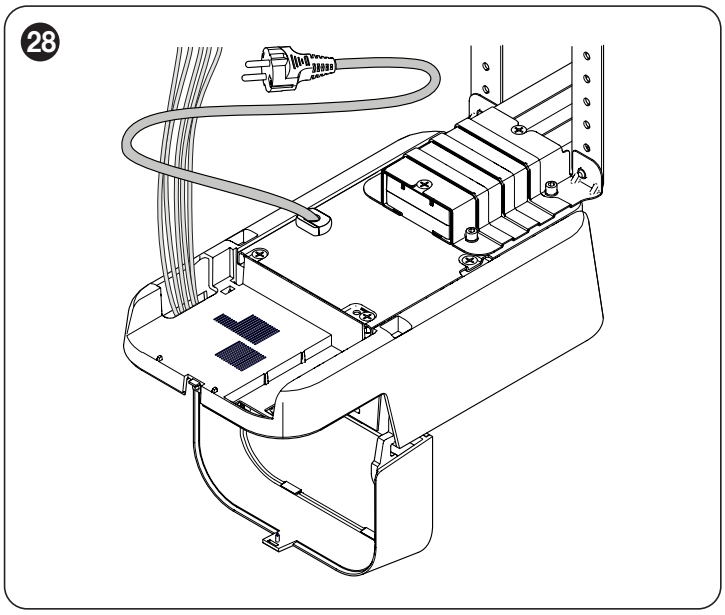

4.2 WIRING DIAGRAM AND DESCRIPTION OF CONNECTIONS

4.2.1 WIRING DIAGRAM

Wiring diagram with relay photocells without PHOTOTEST and with Stand-By mode operation

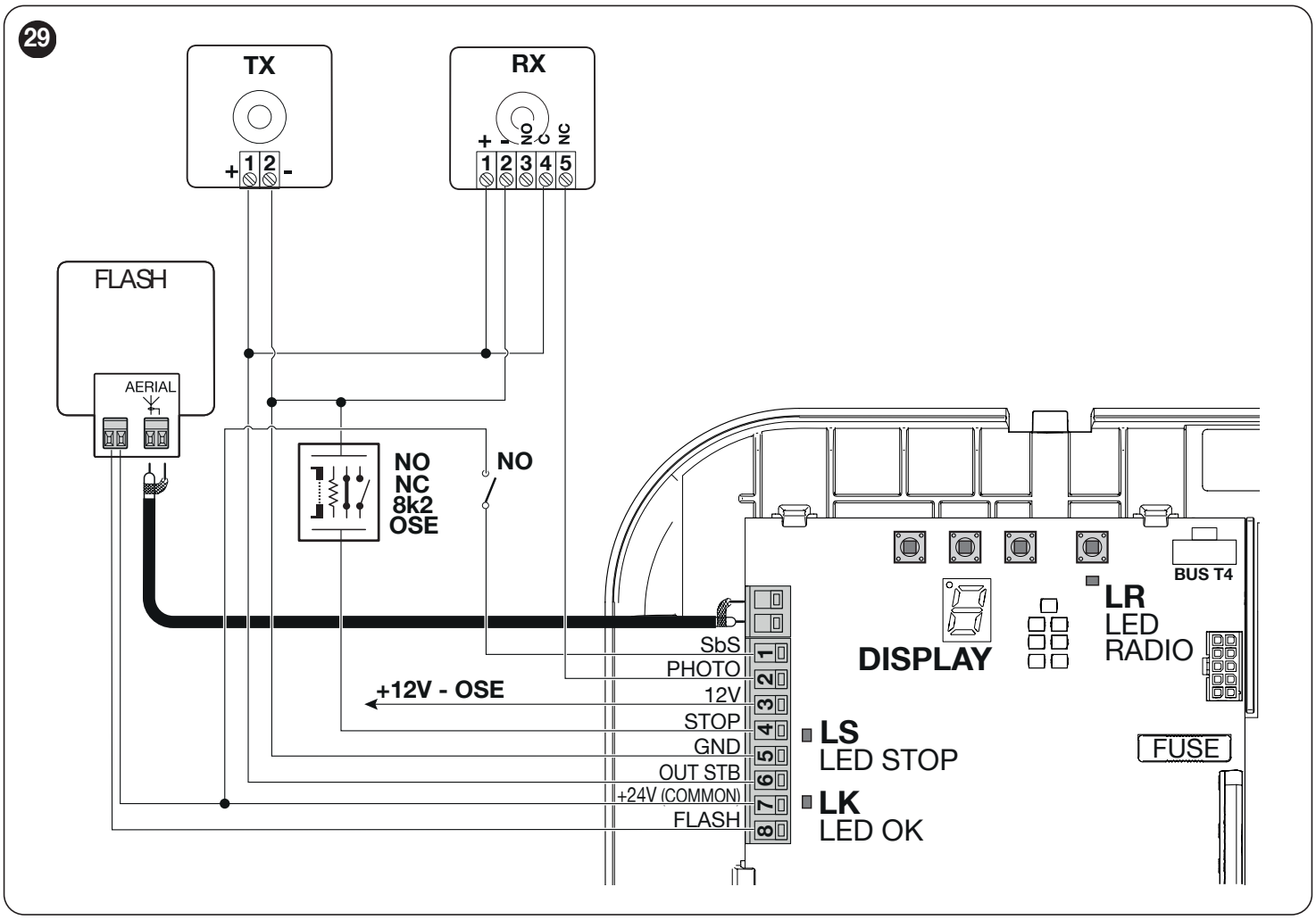

4.2.2 DESCRIPTION OF CONNECTIONS

Table 3

ELECTRICAL CONNECTIONS		
Inputs/Outputs	**N° terminals**	**Description**
FLASH	7,8	This output is programmable (refer to the "***PROGRAMMING***" chapter on page 16) to connect one of the following devices: **Warning light**, "Door open indicator" output, Suction cup [Note 1], Electric latch [Note 1], Electric lock [Note 1], Courtesy light, Radio channel no. 1-4
		If programmed as "**warning light**", on the "FLASH" output it is possible to connect a "ELDC" warning light or similar with a single 12 V maximum 21 W car-type lamp. During the manoeuvre, check that the warning light flashes at intervals of 0.5 seconds on and 0.5 seconds off.
		If programmed as "**door open indicator**", on the "FLASH" output it is possible to connect a 24 V max 10W indicator light to signal the door open status. It can also be programmed for other functions (refer to the "***PROGRAMMING***" chapter on page 16).
		If programmed as "**suction cup**", on the "FLASH" output it is possible to connect a 24 V max 10 W suction cup (versions with electromagnet only, without electronic devices). When the door is closed, the suction cup is activated to lock the door in place. During the opening and closing manoeuvre, it is deactivated.
		If programmed as "**electric latch**", on the "FLASH" it is possible to connect a 24 V max 10 W electric device with latch (versions with electromagnet only, without electronic devices). During the opening manoeuvre, the electric latch is activated and remains active to free the door and perform the manoeuvre. During the closing manoeuvre, ensure that the electric latch re-engages mechanically.
		If programmed as "**electric lock**", on the "FLASH" output it is possible to connect a 24 V max 10 W electric lock with latch (versions with electromagnet only, without electronic devices). During the opening manoeuvre, the electric lock is activated for a brief interval to free the door and perform the manoeuvre. During the closing manoeuvre, ensure that the electric lock re-engages mechanically.

ELECTRICAL CONNECTIONS		
Inputs/Outputs	**N° terminals**	**Description**
OUT STB	5,6	This output is programmable (refer to the "***Setting of the OUT STB operation***" chapter on page 20) to connect one of the following devices: Phototest, Warning light, "Door open indicator" output, Suction cup [Note 1], Electric latch [Note 1], Electric lock [Note 1], Courtesy light, **OUT STB (Default)**, Radio channel 2-4
STOP	4,5	Input for the devices that block or, if necessary, stop the manoeuvre under way. With suitable arrangements, "Normally Closed" or "Normally Open" contacts, or fixed resistor or optical devices can be connected to the input. For further information on the STOP function, refer to the "***STOP input***" paragraph (page 27).
SbS	1,7	Input for devices that control the movement in Step-by-Step mode; it is possible to connect "Normally Open" contacts.
PHOTO	2,6	Input for safety devices: it is possible to connect "Normally Closed" contacts to this input.
AERIAL		Antenna connection input for radio receiver; the antenna is incorporated in the warning light; alternatively, an external antenna can be used.

Note 1 Only devices containing the electromagnet only can be connected.

Note 2 This product has a 24 V/COMMON output for powering auxiliary devices and a BusT4 connector for accessories. The calculation of "Consumption in Stand-By mode" does not take into account the energy consumption of accessories connected to these ports. Check the respective instruction manuals for the consumption levels of additional devices.

5 FINAL CHECKS AND START-UP

5.1 POWER SUPPLY CONNECTION

To connect the gearmotor to the mains electricity, simply insert its plug into a power socket; if necessary, use a common adapter if the plug version is not compatible with the relevant socket.

Never cut or remove the cable supplied.

If a power socket is not already available, the device must be connected to the power supply by qualified and expert personnel possessing the necessary requirements and in full conformity to the applicable laws, standards and regulations.

The power supply line must be protected against short-circuits and ground leakage; a device must be provided to enable disconnection of the power supply during the installation and maintenance of the gearmotor (the plug and socket can be used for this purpose).

As soon as the product is powered, a few simple checks should be carried out:

1. check that the OK LED starts flashing at regular intervals of about 1 flash per second.
2. wait for the start signal, shown on the display with the symbol "8" flashing rapidly and intermittently for 3 seconds.
3. check that the warning light connected to the FLASH output is off.

If the above conditions are not satisfied, immediately switch off the power supply to the control unit and carefully check the electrical connections. Further useful information on fault search and diagnosis is included in the "***Troubleshooting***" paragraph (page 24).

5.2 PROGRAMMING THE DOOR OPENING AND CLOSING POSITIONS

Function found in the INSTALLATION menu.

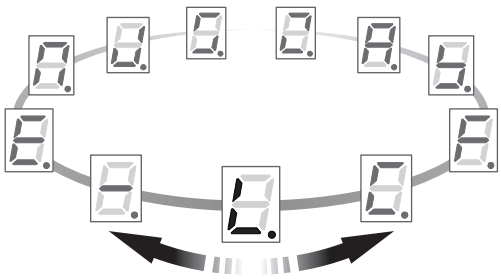

In order to be able to move the automation correctly, the control unit must identify whether there are any photocells, the type of safety devices connected to the STOP input and subsequently memorise the stop positions.

Preliminary checks:
- check that the belt or chain in the guide is correctly taut
- check the automation's balancing (the door unlocked by the motor carriage must remain stationary in any opening position)
- check that the motor carriage is locked.

If, during the ensuing procedure, the door must be moved in the opposite direction, it is necessary to perform the procedure described in the "*Inverting the direction of motor rotation*" chapter (page 14).

If, during the programming of the positions, the procedure is interrupted through a STOP command or by the intervention of the PHOTO, the movement will be stopped and the cause of the stoppage signalled (see "*Table 20*"). After verifying the cause, the procedure can be resumed from the point where it was stopped by pressing the [Open ▲] or [Close ▼] button again.

To start this procedure:

1. press and hold the **[Stop/Set]** button for roughly 5 seconds: the symbol on the display will flash slowly ("***Figure 30***")

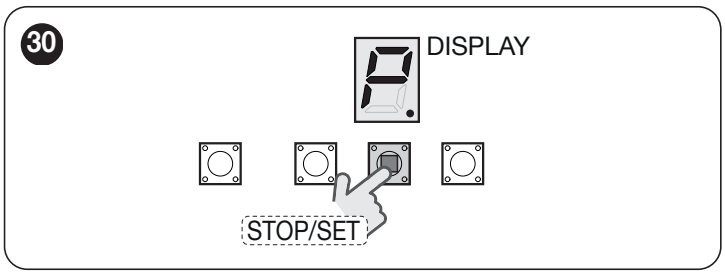

2. press and hold the **[Open ▲]** button: the symbol on the display will flash slowly ("***Figure 31***")

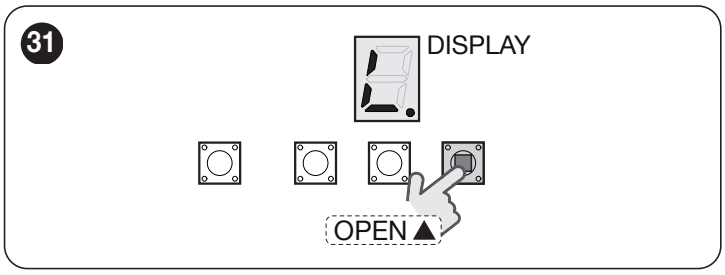

3. press the **[Stop/Set]** button to start the acquisition procedure; the on the display will start flashing more rapidly ("***Figure 32***")

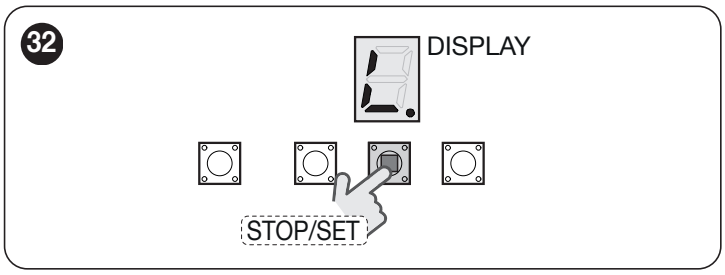

4. wait for the control unit to complete the device acquisition phase; once it terminates, the display will remain steady lit ("***Figure 33***")

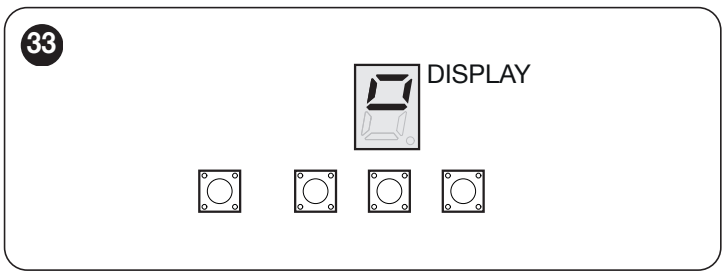

5. press and hold the **[Open ▲]** button to move the door up to the fully open position; the display will flash during the manoeuvre ("***Figure 34***"). If necessary, use the **[Close ▼]** button to modify the door's position

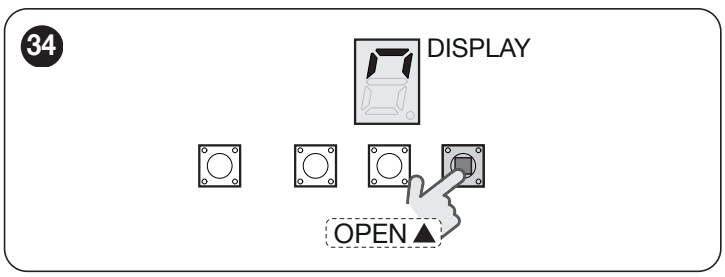

6. confirm the desired opening position by pressing the **[Stop/Set]** button until the symbol shown in the figure appears, then release the button ("***Figure 35***")

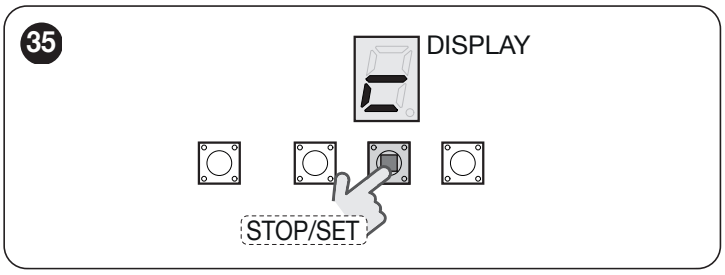

7. press and hold the **[Close ▼]** button to move the door up to the fully closed position; the display will flash during the manoeuvre ("***Figure 36***"). If necessary, use the **[Open ▲]** button to modify the door's position

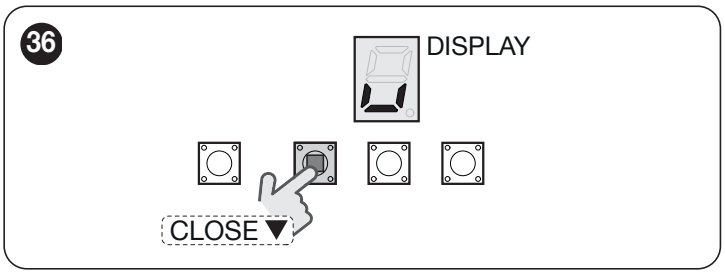

8. confirm the desired closing position by pressing the **[Stop/Set]** button for 5 seconds; the symbol on the display will flash slowly ("***Figure 37***")

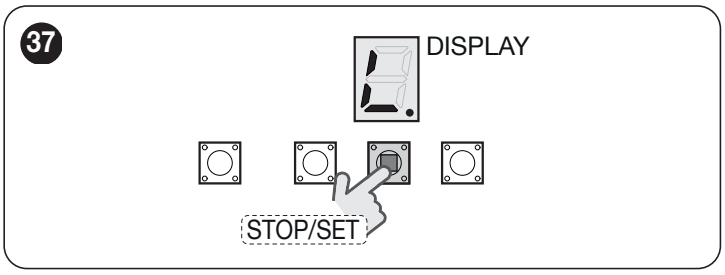

9. press the **[Close ▼]** button to reach the exit symbol and then press the **[Stop/Set]** button once to exit the menu ("***Figure 38***")

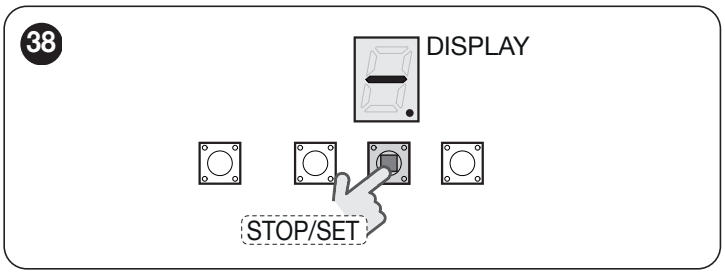

10. press the **[Open ▲]** button to start the "Automatic force search" procedure; **wait for the door to open and close**
11. at the end of the procedure, the display will be lit steady ("***Figure 39***").

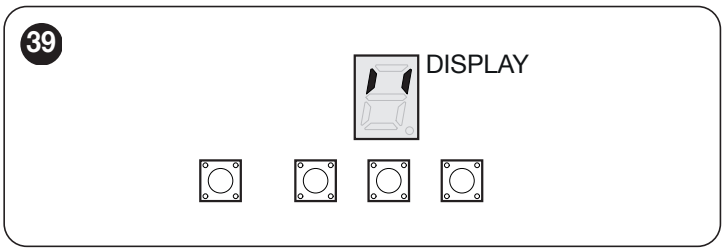

⚠ **If, at the end of the procedure, the display flashes, it means that an error has occurred. The procedure must be restarted from point 1.**

5.3 AUTOMATIC FORCE SEARCH

The control unit requires this procedure after certain settings are modified (e.g.: speed, opening and closing positions, tension release value, etc.) and is signalled by the flashing of the courtesy light if the manoeuvre is controlled through a remote input (SbS input, compatible radio or BusT4 interface commands). If the procedure is started from the control unit buttons, the courtesy light will not switch on.
To start this procedure:

1. press one of these buttons to move the door (press **[Open ▲]** if the door is in the closing position, or **[Close ▼]** if it is in the opening position) ("***Figure 40***")

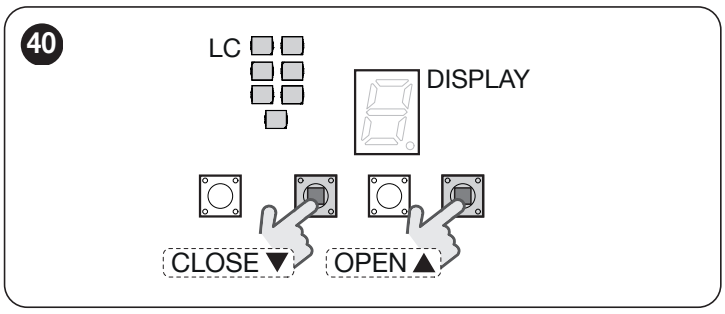

2. an opening and closing manoeuvre (or inversely) will be carried out automatically in succession so that the control unit can assess the necessary force required for the subsequent manoeuvres

These manoeuvres will be carried out with high force. During their execution, check that there are no assembly/adjustment defects or other anomalies, for example points of excessive friction, and solve them.

3. the procedure has been completed.

It is important that the procedure is not interrupted, for example with a STOP command or through an intervention of the PHOTO. Should this occur, it can be restarted by imparting a [Open ▲] or [Close ▼] command.

5.4 CHECKING THE DOOR MOVEMENT

After the automatic force learning procedure, it is advisable to carry out a few manoeuvres in order to verify that the door moves properly.
To do this:

1. press the **[Open ▲]** button to command an opening manoeuvre; verify that it occurs smoothly without any speed variations; the door must slow down when it lies between 30 and 20 cm from the maximum opening set previously.
2. press the **[Close ▼]** button to command a closing manoeuvre; verify that it occurs smoothly without any speed variations; the door must slow down when it lies between 30 and 20 cm from the ground and stop when it comes into contact with the floor. It will then perform a brief opening manoeuvre to release the belt/chain tension ("***Figure 41***")

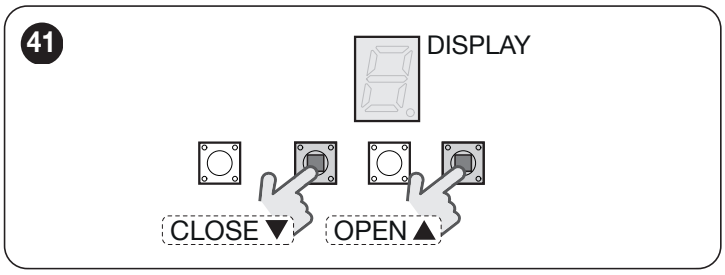

3. during the manoeuvre, check that the warning light flashes at intervals of 0.5 seconds on and 0.5 seconds off
4. open and close the gate several times to make sure that there are no points of excessive friction and that there are no defects in the assembly or adjustments
5. check that the gearmotor and guide are fastened in a solid, stable and suitably resistant manner even during sudden door acceleration or slowdown movements.

5.5 INVERTING THE DIRECTION OF MOTOR ROTATION

The following procedure allows for modifying the motor's direction of rotation if the installation must be inverted.

This procedure is only available during the control unit's start phase.

To perform this procedure:

1. switch the control unit off and remove fuse F1 ("***Figure 42***")

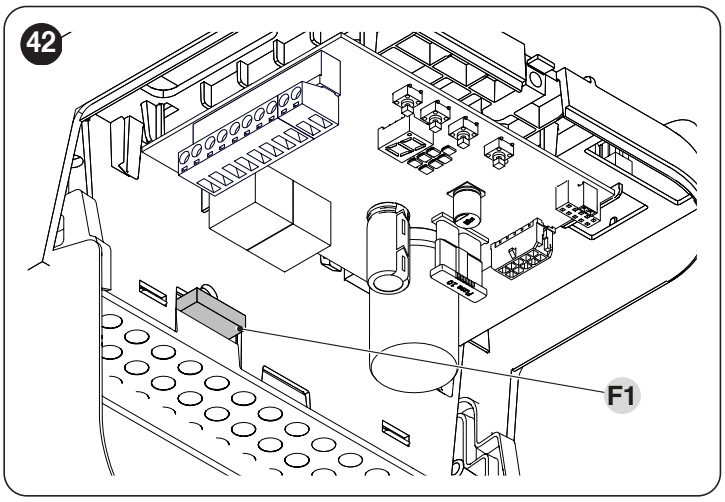

2. press and hold the **[Stop/Set]** button
3. reinsert the fuse: the control unit will switch on
4. release the **[Stop/Set]** button after 3 seconds ("***Figure 43***")

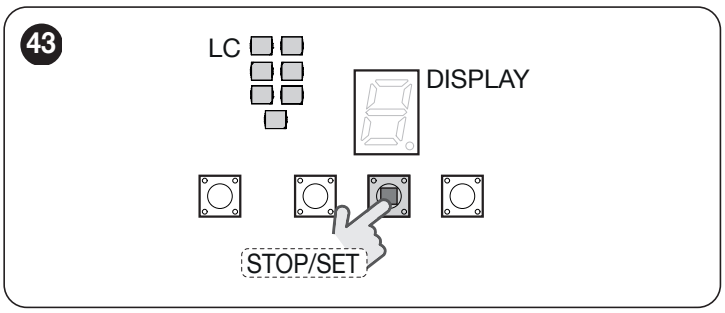

5. press the **[Stop/Set]** button to modify the direction of rotation which will shown by means of the courtesy light (LC):
   - with the LC on, the rotation direction will be inverted
   - with the LC off, the rotation direction will be standard
6. wait 3 seconds without pressing the buttons to confirm and exit the programming mode.

After modifying the rotation direction it will be necessary to rerun the position acquisition procedure (consult the "*Programming the door opening and closing positions*" chapter on page 12).

6 TESTING AND COMMISSIONING

These are the most important phases of the automation's construction, as they ensure maximum safety of the system. The test can also be used to periodically verify the devices making up the automation.

Testing and commissioning of the automation must be performed by skilled and qualified personnel, who are responsible for the tests required to verify the solutions adopted according to the risks present, and for ensuring that all legal provisions, standards and regulations are met, in particular all the requirements of the EN 12453 standard, which defines the test methods for checking door automations.

The additional devices must undergo specific testing, both in terms of their functions and their proper interaction with the control unit. Refer to the instruction manuals of the individual devices.

WARNING! The Stand-By function is active by default. The control unit enters the Stand-By mode, switching off the circuits and reducing consumption, 10 minutes after power-up, if the board is not configured with the positions, and after 5 minutes if it is configured. This time can be modified by consulting the paragraph "*Setting the Stand-By mode*".

6.1 TESTING

To run the test:

1. verify that all the instructions stated in the "***GENERAL SAFETY WARNINGS AND PRECAUTIONS***" chapter (page 2) have been strictly observed
2. unlock the gearmotor as indicated in the "***Manually unlocking and locking the gearmotor***" paragraph (page 9)
3. make sure that the gate can be moved manually during both the opening and closing phases with a force not exceeding 225N (roughly 23 kg)
4. lock the gearmotor
5. using the control devices (selector, radio transmitter, etc.), test the door opening, closing and stoppage phases, ensuring that the movement matches the specifications. Run several tests to check that the door moves smoothly and check for any defects in the assembly or adjustment and any possible points of friction
6. To check the operation of the photocells and ensure that there is no interference with other devices, pass a cylinder (5 cm diameter, 30 cm length) on the optical axis, first near the **"TX"** photocell then near **"RX"** photocell and, lastly, at the mid-point between the two and verify that in all these cases the device is triggered, switching from the active to the alarm status and vice-versa; make sure that it triggers the intended action in the control unit; for example, that it triggers the reversal of movement during the closing manoeuvre.
7. check, one-by-one, that all safety devices mounted on the system (photocells, sensitive edges, etc.) work properly. Each time a device intervenes, the "**OK**" LED on the control unit will emit two faster flashes to confirm the recognition
8. if potentially dangerous situations due to the movement of the leaves have been prevented by limiting the impact force, the latter must be measured according to the EN 12445 standard and, if the "motor force" control is used to aid the system in reducing the impact force, it is necessary to test various adjustments to find the one that gives the best results.

6.2 COMMISSIONING

Commissioning can only be performed after all testing phases have been successfully completed.

Before commissioning the automation, ensure that the owner is properly informed of all residual risks and hazards.

The gate cannot be commissioned partially or under "temporary" conditions.

To commission the automation:

1. compile the automation's technical file, which must include the following documents: overall drawing of the automation, wiring diagram, risk assessment and relative solutions adopted, the manufacturer's declaration of conformity for all devices used and the declaration of conformity compiled by the installer
2. permanently affix a label or plate in the vicinity of the door, indicating the operations for the door unlocking and manual manoeuvres
3. affix a label to the door containing at least the following data: type of automation, name and address of manufacturer (person responsible for commissioning), serial number, year of manufacture and the CE mark
4. compile the declaration of conformity of the automation and hand it to the owner of the automation
5. compile the User Manual of the automation and hand it to the owner of the automation
6. compile and provide the owner with the automation's "Maintenance schedule", containing the maintenance instructions for all the automation's devices.

For all the above-mentioned documentation, Nice – through its technical assistance service – provides the following: instruction manuals and guides.

7 PROGRAMMING

There are 4 buttons on the control unit: **[Open ▲]**, **[Stop/Set]**, **[Close ▼]** and **[Radio ⌨))]** ("***Figure 44***") which can be used to command and programme the control unit.
Moreover, the control unit has a display with 7 segments that facilitates browsing of the menus when modifying the parameters and functions.

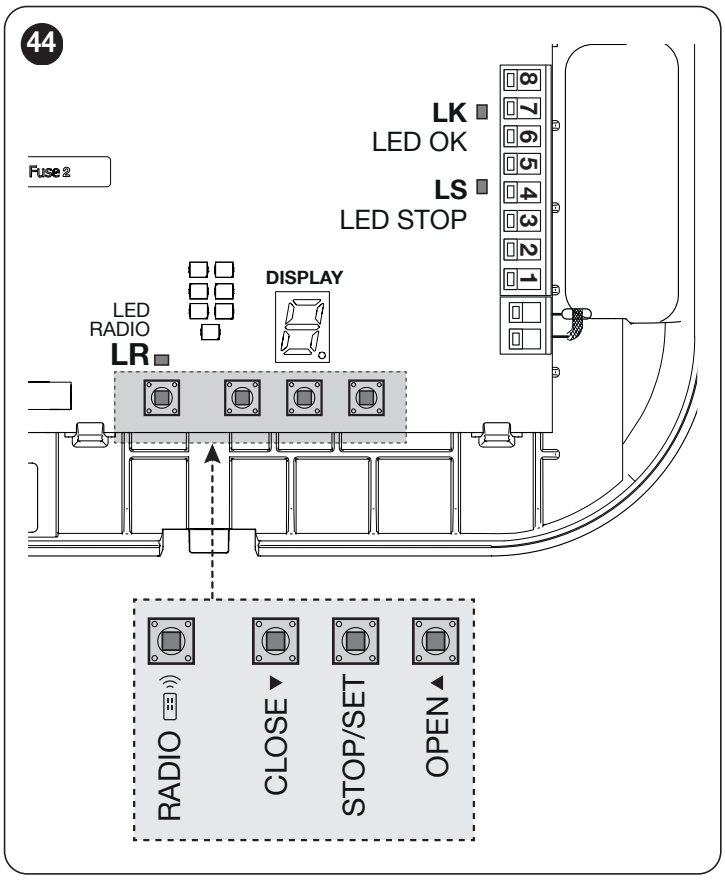

7.1 USING THE PROGRAMMING BUTTONS

During programming:
[Open ▲]
- scrolls the programming menu forward
- increases by one point the value of the parameter being modified

[Stop/Set]
- accesses the configuration of the selected parameter
- confirms the selected value

[Close ▼]
- scrolls the programming menu backwards
- decreases by one point the value of the parameter being modified

[Radio ⌨))]
- not used

During normal operation:
[Open ▲]
- performs an opening manoeuvre (the courtesy light stays off)

[Stop/Set]
- stops the current manoeuvre
- with the motor stationary, it switches the courtesy light off
- accesses the programming menu if pressed for 5 seconds

[Close ▼]
- performs a closing manoeuvre (the courtesy light stays off)

[Radio ⌨))]
- allows for memorising or deleting radio remote controls

7.2 PROGRAMMING THE CONTROL UNIT

The programming menu allows for accessing the automation's functions and modifying its configuration.
The menu contains 10 items which allow for configuring a parameter or starting a specific procedure. The items scroll cyclically, that is, after the last item the system returns to the first item.

The programming menu can only be accessed with the motor stationary.

To access the programming functions of a menu:

1. press and hold the **[Stop/Set]** button for roughly 5 seconds: the symbol on the display will flash slowly ("***Figure 45***")

This symbol will only appear on the first access and will no longer be visible after pressing the [Open ▲] or [Close ▼] button once.

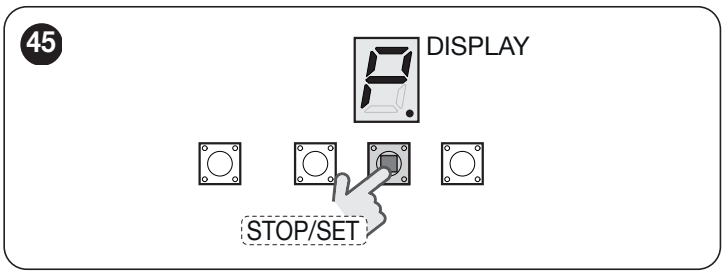

Every menu item is represented by the lit dot to distinguish it from the respective programming values, which instead have the dot off.

2. press the **[Open ▲]** or **[Close ▼]** button until you reach the desired menu ("***Figure 46***")

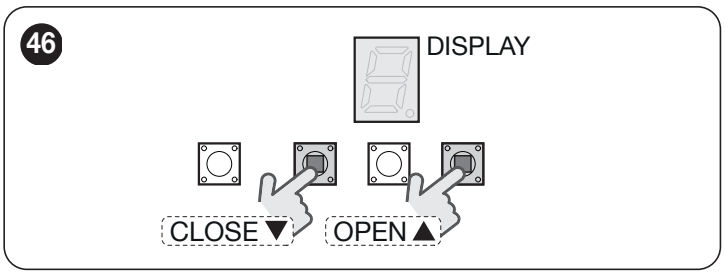

3. press the **[Stop/Set]** button to access the parameter: depending on the function performed by the latter, it will be possible to set a value or start a specific procedure. For further information, refer to "***Table 4***" and the subsequent chapters

If the current configuration of a parameter fails to match any of the pre-defined values (see the details of each parameter), the symbol shown in "*Figure 47*" will be displayed. The [Open ▲] or [Close ▼] button can be used to modify the value by replacing it with a known configuration.

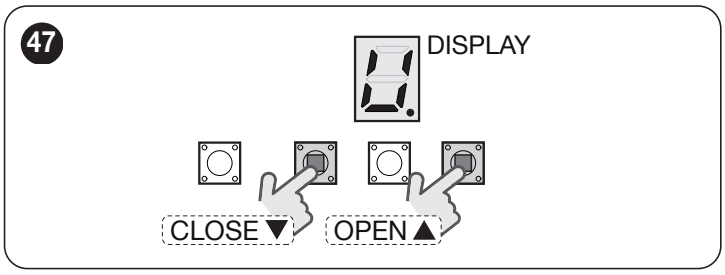

4. press the **[Open ▲]** or **[Close ▼]** button to modify the desired value
5. press the **[Stop/Set]** button to confirm the chosen value and return to the programming menu or, to exit without making any change, go to the exit symbol ("***Figure 48***") and confirm with the **[Stop/Set]** button

Multiple programming operations can be completed without exiting the menu: in this case, repeat the procedure from point 2. At the end of the programming activities, go to point 6.

6. to exit the menu, go to the exit symbol and confirm with the **[Stop/Set]** button ("***Figure 48***").

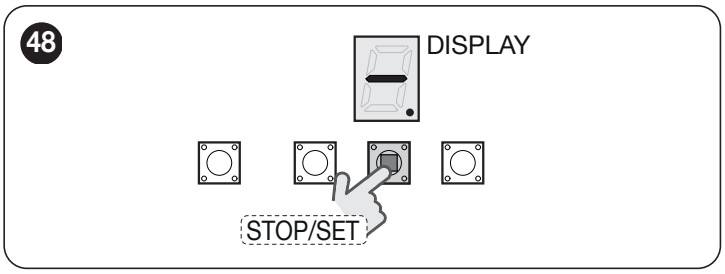

Table 4

PROGRAMMING MENU				
Pos.	**Symbol**	**Values**	**Function**	**Description**
-		-	Control unit awaiting commands	Control unit configured correctly (programmed devices and acquired positions)
0		-	Access to the menu	Visible only upon first access
1		-	Search for devices and position programming (see the "***Programming the door opening and closing positions***" chapter on page 12)	Allows for learning the connected device and/or programming the positions
2		0-50 ("***Table 5***")	Stand-By mode (see the "***Setting the Stand-By mode***" chapter on page 18)	Allows for activating/deactivating the Stand-By mode and setting the idle time before entering the low energy consumption mode
3		0-9 ("***Table 6***")	Force (see the "***Setting of the motor force***" chapter on page 18)	Allows for modifying the automation's opening and closing forces
4		0-9 ("***Table 7***")	Speed (see the "***Setting the motor speed***" chapter on page 18)	Allows for modifying the automation's opening and closing speeds (the "***Automatic force search***" will follow)
5		0-9 ("***Table 8***")	Automatic closing (see the "***Setting the automatic closing***" chapter on page 19)	Allows for activating, deactivating or modifying the pause time of the automatic closing cycle
6		0-9 ("***Table 9***")	FLASH (OUT1) configuration (see the "***Setting the FLASH function***" chapter on page 19)	Allows for modifying the operating setting of the FLASH (OUT1) output
7		0-9 ("***Table 10***")	OUT STB (OUT2) configuration (see the "***Setting of the OUT STB operation***" chapter on page 20)	Allows for modifying the operating setting of the OUT STB (OUT2) output
8		0-9 ("***Table 11***")	Tension release (see the "***Setting the tension release***" chapter on page 20)	Allows for modifying the tension length (the " ***Automatic force search***" will follow)
9		0-3 ("***Table 12***")	SbS operation (see the "***Setting the SbS operation***" chapter on page 21)	Allows for modifying the operating setting of the Step by Step command
10		0-3 ("***Table 13***")	Memory deletion (see the "***Memory deletion***" chapter on page 21)	Allows for deleting the existing configuration or the memorised radio remote controls
11		-	Exit	Exit from the menu or cancellation of the current modification of a parameter

7.3 SETTING THE STAND-BY MODE

Function found in the STAND-BY menu.

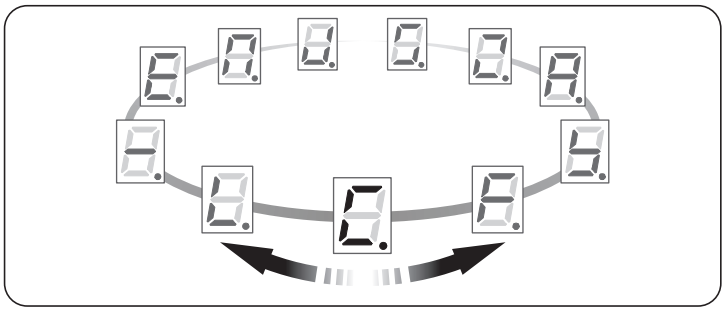

This function can be used to activate/deactivate the Stand-By mode and select how many minutes after the end of the manoeuvre it will activate, thus sensibly reducing consumption. In Stand-By mode the control unit switches off a few internal circuits and the Flash, OUT STB and 12 V outputs. With this function active and by connecting the external devices as described in "***Figure 45***", the product's consumption is as declared in the technical characteristics "Consumption in Stand-By mode". With this function deactivated or with different connections and accessories, the product will consume more.

Using the **[Open ▲]** and **[Close ▼]** buttons, select one of the values present in the underlying table. To confirm it, press the **[Stop/Set]** button.

Table 5

SELECTION OF THE STAND-BY MODE AND IDLE TIME	
Value	**Description**
0	Stand-By mode deactivated (Default for versions V1)
1	Stand-By mode active – Idle time before entering Stand-By mode 1 minute
2	Stand-By mode active – Idle time before entering Stand-By mode 2 minutes
3	Stand-By mode active – Idle time before entering Stand-By mode 3 minutes
4	Stand-By mode active – Idle time before entering Stand-By mode 4 minutes
5 (Default)	**Stand-By mode active – Idle time before entering Stand-By mode 5 minutes**

7.4 SETTING OF THE MOTOR FORCE

Function found in the FORCE menu.

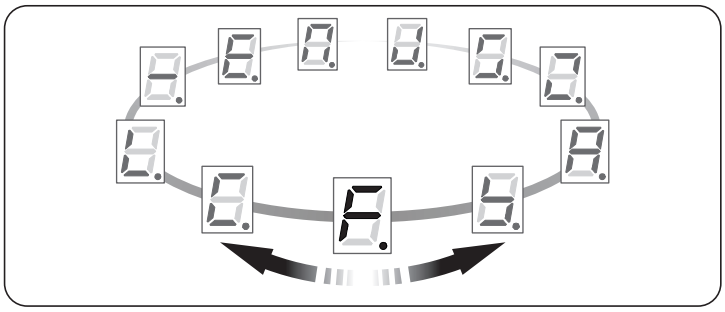

This function allows for modifying the force and friction sensitivity that the control unit uses to move the door.

Using the **[Open ▲]** and **[Close ▼]** buttons, select one of the values present in the underlying table. To confirm it, press the **[Stop/Set]** button.

Table 6

MOTOR FORCE SELECTION	
Value	**Description**
0	Minimum force
1	...
2	...
3	...
4	...
5 (Default)	**Medium force**
6	...
7	...
8	...
9	Maximum force

7.5 SETTING THE MOTOR SPEED

Function found in the SPEED menu.

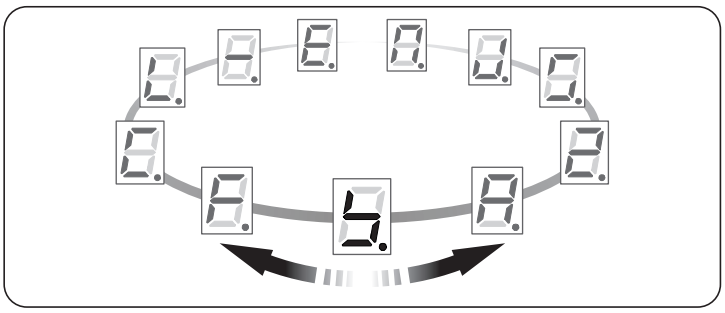

This function allows for modifying the automation's opening and closing speeds.

Using the **[Open ▲]** and **[Close ▼]** buttons, select one of the values present in the underlying table. To confirm it, press the **[Stop/Set]** button.

At the end of the operation, the automation will ask to run the automatic force search procedure, (consult the "*Automatic force search*" chapter on page 14).

Table 7

MOTOR SPEED SELECTION		
Value	**Opening speed**	**Closing speed**
0	Speed 40%	Speed 40%
1	Speed 50%	Speed 50%
2	Speed 50%	Speed 75%
3	Speed 50%	Speed 100%
4	Speed 75%	Speed 50%
5	Speed 75%	Speed 75%
6	Speed 75%	Speed 100%
7	Speed 100%	Speed 50%
8 (Default)	**Speed 100%**	**Speed 75%**
9	Speed 100%	Speed 100%

7.6 SETTING THE AUTOMATIC CLOSING

Function found in the AUTOMATIC CLOSING menu.

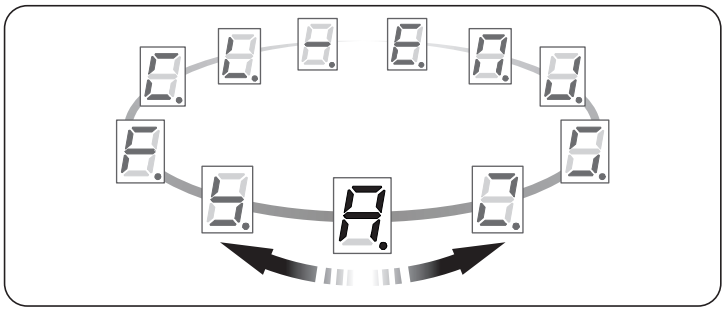

This function allows for activating or deactivating the automatic closing movement at the end of an opening manoeuvre and modifying its stand-by time.
If the function is active (values from 1 to 9), the automatic closing manoeuvre starts at the end of the programmed stand-by time (Pause time). If the function is not active (value 0) the control unit will operate in "semi-automatic" mode.

Using the **[Open ▲]** and **[Close ▼]** buttons, select one of the values present in the underlying table. To confirm it, press the **[Stop/Set]** button.

Table 8

AUTOMATIC CLOSING TIME SELECTION	
Value	**Pause time**
0 **(Default)**	**Disabled**
1	10 seconds
2	20 seconds
3	30 seconds
4	40 seconds
5	50 seconds
6	60 seconds
7	70 seconds
8	80 seconds
9	90 seconds

7.7 SETTING THE FLASH FUNCTION

Function found in the FLASH CONFIGURATION menu (OUT1).

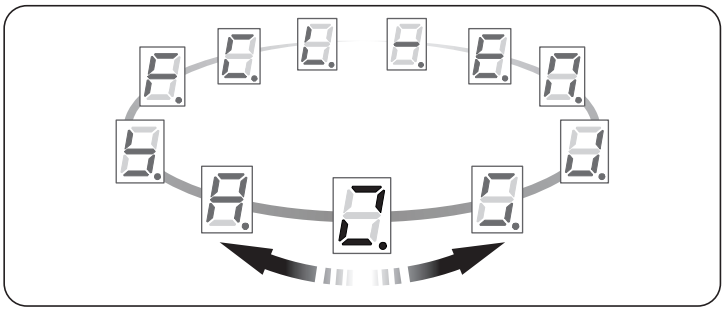

This function allows for modifying the operating setting of the FLASH (OUT1) output. The connection must be made between terminal 7 and 8.

Using the **[Open ▲]** and **[Close ▼]** buttons, select one of the values present in the underlying table. To confirm it, press the **[Stop/Set]** button.

In Stand-By mode the control unit switches off a few internal circuits and the Flash, OUT STB and 12 V outputs. With this function active and by connecting the external devices as described in "*Figure 45*", the product's consumption is as declared in the technical characteristics "Consumption in Stand-By mode". With this function deactivated or with different connections and accessories, the product will consume more.

Table 9

FLASH (OUT1) OUTPUT SETTING	
Value	**Description**
0 **(Default)**	**Warning light** **This function allows the flashing indicator to signal the execution of a manoeuvre in progress with flashes at regular intervals (0.5 seconds on; 0.5 seconds off).** **Output active 12 V DC / max 21 W**
1	**Door status** This function allows for activating the output when the motor is moving. Output active 24 V DC / max 10 W
2	**Electric lock** When the opening manoeuvre is performed, the electric lock activates for 3 seconds. Output active 24 V DC / max 10 W
3	**Electric latch** When the opening manoeuvre is performed, the electric lock activates. It is not active during the closing manoeuvre. Output active 24 V DC / max 10 W
4	**Suction cup** The suction cup activates when the application is in the fully closed position; in all other situations it is deactivated. When the suction cup deactivates, before an opening manoeuvre starts there is a 3-second delay. Output active 24 V DC / max 10 W
5	**Courtesy light** When the manoeuvre is performed, the output activates and stays activated for 1 minute after the end of the manoeuvre. Output active 24 V DC / max 10 W. See "***Signals with courtesy light***" (page 26).
6	**Radio channel 1** If this radio channel is set, the output activates when a command is sent with the transmitter. WARNING! If this radio channel is not free on the control unit receiver, due to having being previously memorised with a command, the control unit will only activate the programmed output when the channel is activated with the transmitter, ignoring the command towards the motor. Output active 24 V DC / max 10 W
7	**Radio channel 2** Like setting no. 6, on radio channel 2.
8	**Radio channel 3** Like setting no. 6, on radio channel 3.
9	**Radio channel 4** Like setting no. 6, on radio channel 4.

7.8 SETTING OF THE OUT STB OPERATION

Function found in the OUT STB CONFIGURATION menu (OUT2).

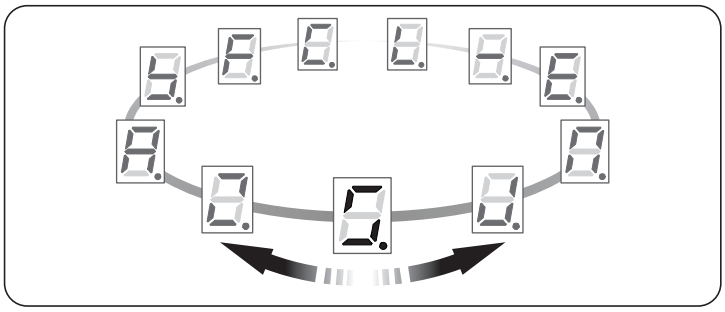

This function allows for modifying the operating setting of the OUT STB (OUT2) output. The connection must be made between terminal 5 and 6.

Using the **[Open ▲]** and **[Close ▼]** buttons, select one of the values present in the underlying table. To confirm it, press the **[Stop/Set]** button.

In Stand-By mode the control unit switches off a few internal circuits and the Flash, OUT STB and 12 V outputs. With this function active and by connecting the external devices as described in "*Figure 45*", the product's consumption is as declared in the technical characteristics "Consumption in Stand-By mode". With this function deactivated or with different connections and accessories, the product will consume more.

Table 10

OUT STB (OUT2) OUTPUT SETTING	
Value	**Description**
0	**Phototest** Allows for verifying, at the start of a manoeuvre, the correct operation of all the safety devices (see the "***Photocells with PHOTOTEST function***" paragraph on page 27). Note: Whenever this setting is chosen, the devices must be learned again (see "***Programming the door opening and closing positions***"). 24 V DC 3 W output
1	**Door status** This function allows for activating the output when the motor is moving. Output active 24 V DC / max 3W
2	**Electric lock** When the opening manoeuvre is performed, the electric lock activates for 3 seconds. Output active 24 V DC / max 3W
3	**Electric latch** When the opening manoeuvre is performed, the electric lock activates. It is not active during the closing manoeuvre. Output active 24 V DC / max 3W
4	**Suction cup** The suction cup activates when the application is in the fully closed position; in all other situations it is deactivated. When the suction cup deactivates, before an opening manoeuvre starts there is a 3-second delay. Output active 24 V DC / max 3W
5	**Courtesy light** When the manoeuvre is performed, the output activates and stays activated for 1 minute after the end of the manoeuvre. Output active 24 V DC / max 3W. See "***Signals with courtesy light***" (page 26).
6 **(Default)**	**OUT STB** **Output for connecting accessories (for example photocells). This output follows the operation of the Stand-By mode: active during the manoeuvre and up to the expiry of the idle time. Deactivated during execution of the Stand-By mode.** **Output active 24 V DC / max 3W**

OUT STB (OUT2) OUTPUT SETTING	
Value	**Description**
7	**Radio channel 2** If this radio channel is set, the output activates when a command is sent with the transmitter. **WARNING!** If this radio channel is not free in the control unit's receiver, as it was previously memorised with a command, when activating the channel with the transmitter, the control unit will only activate the programmed output, ignoring the command to the motor. Output active 24 V DC / max 3W
8	**Radio channel 3** As per setting no. 7, on radio channel 3.
9	**Radio channel 4** As per setting no. 7, on radio channel 4.

7.9 SETTING THE TENSION RELEASE

Function found in the TENSION RELEASE menu.

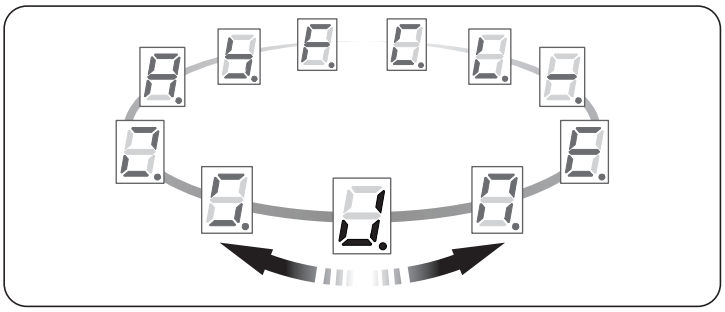

This function allows for releasing the mechanical tension that accumulates in the components after every manoeuvre. When the closing position is reached, the motor will perform a brief inversion to release the belt or chain tension.

Using the **[Open ▲]** and **[Close ▼]** buttons, select one of the values present in the underlying table. To confirm it, press the **[Stop/Set]** button.

At the end of the operation, the automation will ask to run the automatic force search procedure, (consult the "*Automatic force search*" chapter on page 14).

Table 11

TENSION RELEASE SELECTION	
Value	**Description**
0	Release deactivated
1	Minimum release
2	...
3 **(Default)**	**...**
4	...
5	Medium release
6	...
7	...
8	...
9	Maximum release

7.10 SETTING THE SBS OPERATION

Function found in the SbS OPERATION menu.

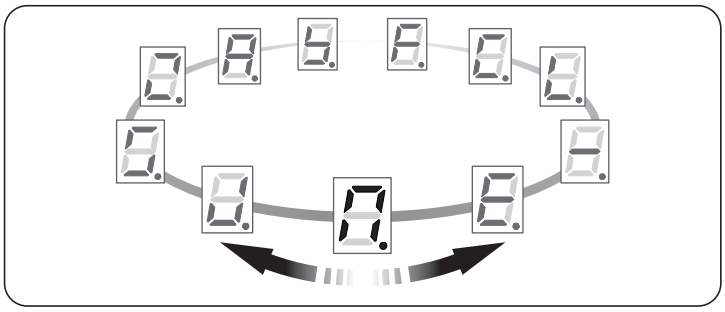

This function allows for modifying the SbS command sequence.

Using the **[Open ▲]** and **[Close ▼]** buttons, select one of the values present in the underlying table. To confirm it, press the **[Stop/Set]** button.

Table 12

SBS OPERATION SELECTION	
Value	**Description**
0 **(Default)**	**Open, stop, close, open**
1	Open, stop, close, stop
2	Condominium Step-by-Step 1 This runs the sequence “close - stop - open - open”, until it reaches the fully open position. If another command is sent after this one, the automation executes the closing manoeuvre with the same sequence.
3	“Industrial” mode Opening in “semi-automatic” mode, closing in “hold-to-run” mode
4	Condominium 1 If the Automatic Closing function is deactivated, the product will behave as in the Open only mode. If the “Automatic Closing” function is active, the “open - open” sequence is executed until the maximum opening position is reached. If another command is sent after this one, the automation will remain open and the idle time will be reset for the automatic closing manoeuvre.

7.11 MEMORY DELETION

Function found in the MEMORY DELETION menu.

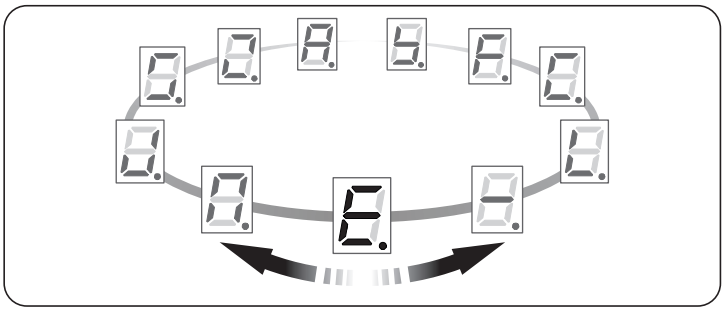

This function allows for completely or partially resetting the configuration of the control unit.

Using the **[Open ▲]** and **[Close ▼]** buttons, select one of the values present in the underlying table. To confirm it, press the **[Stop/Set]** button.

All the available modes are irreversible!

When any item is selected, no confirmation will be requested and the deletion operation will start immediately.

Table 13

DELETION MODE SELECTION	
Value	**Description**
0	Resets to the default values all the parameters present in the programming menu. **Does not delete the positions and the radio remote controls**. It may be necessary to rerun the “Automatic Force Search” procedure.
1	Deletes all the control unit configurations including the devices and positions. Does not delete the memorised radio remote controls.
2	Deletes all the memorised radio remote controls. Does not delete the control unit configurations.
3	Delete all.

7.12 MEMORISING THE TRANSMITTERS

The control unit incorporates a radio receiver compatible with all transmitters that adopt the NICE **OPERA** radio encoding protocols.
The procedures described below enable the user to memorise or delete one or more radio remote controls from the control unit’s memory. All the operations must be carried out through the **[Radio))]** button and supervised through the “**LR**” LED.
During the radio programming, the display will be lit as shown in “***Figure 49***”.

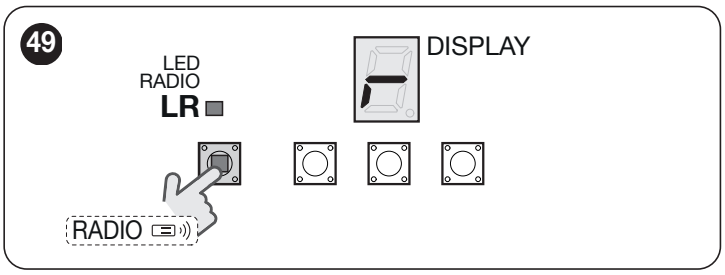

7.12.1 PROCEDURE FOR MEMORISING TRANSMITTER BUTTONS

Among the available procedures for memorising transmitters, some allow for memorising in "standard" mode (or Mode 1) and others in "custom" mode (or Mode 2).

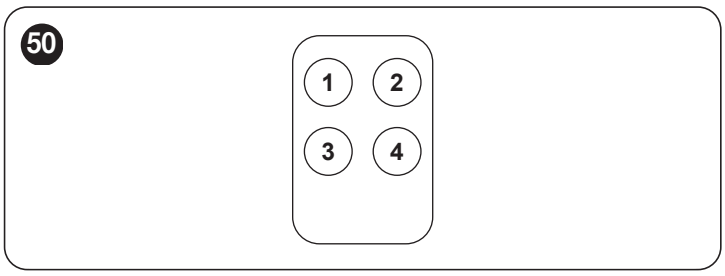

7.12.1.1 STANDARD memorisation (Mode 1: all buttons)

Procedures of this kind allow for simultaneously memorising, during their execution, **all the buttons** on the transmitter. The system automatically associates each button with a pre-defined command, according to the following scheme:

Table 14

TRANSMITTER FUNCTION PAIRINGS	
Command	**Button**
Step-by-Step	Will be paired with button 1
Partial opening	Will be paired with button 2
OPEN	Will be paired with button 3
CLOSE	Will be paired with button 4

7.12.1.2 CUSTOM memorisation (Mode 2: one button only)

Procedures of this type allow for memorising – during their execution – **a single button** among those present on the transmitter.
The installer decides which button to associate with the command on the basis of the automation's needs.

7.12.2 NUMBER OF TRANSMITTERS THAT CAN BE MEMORISED

The control unit's receiver has 90 memory locations. A location can memorise either a single transmitter (i.e. the combination of its buttons and commands) or a single button with the relative command.

7.12.3 TRANSMITTER MEMORISATION AND DELETION PROCEDURES

To be able to run Procedures A, B, C and D described below, the control unit's memory must be unlocked. If the memory is locked, perform the unlocking procedure described in the "*Locking and unlocking the memory*" chapter (page 23)

7.12.3.1 PROCEDURE A - Memorising ALL buttons of a single transmitter (STANDARD mode or Mode 1)

To perform this procedure:

1. **on the control unit:** press and hold the **[Radio ⌨)))]** button until the "**LR**" LED lights up
2. release the button **[Radio ⌨)))]**
3. (within 10 seconds) **on the transmitter to be memorised:** press and hold any button and wait until the "**LR**" LED emits 3 long flashes (= memorisation completed correctly)
4. release the transmitter button.

After the 3 long flashes a further 10 seconds remain to memorise an additional transmitter (if desired), starting from step 3. To terminate the learning procedure, press the [Radio ⌨)))] button again.

The "LR" LED can also emit the following signals: 1 fast flash, if the transmitter is already memorised, 6 flashes, if the transmitter's radio encoding system is not compatible with that of the control unit's receiver, or 8 flashes, if the memory is full.

7.12.3.2 PROCEDURE B - Memorising a SINGLE BUTTON of a transmitter (CUSTOM mode or Mode 2)

To perform this procedure:

1. choose the command to be paired with the relevant button to be memorised:

Table 15

COMMANDS FOR TRANSMITTER	
Command	**Number of [Radio ⌨)))] button presses**
Step-by-Step	1
Partial Open	2
OPEN	3
CLOSE	4
Timer courtesy light	5
On/Off courtesy light	6

2. **on the control unit:** press and release the **[Radio ⌨)))]** button for a number of times corresponding to the desired command, as shown in ***Table 15***.
3. verify that LED "**LR**" on the control unit emits a number of flashes equal to the number of the desired command
4. (within 10 seconds) **on the transmitter**: press and hold the button to be memorised and wait for the "**LR**" LED to emit 3 long flashes (= memorisation completed correctly)
5. release the transmitter button.

After the 3 long flashes a further 10 seconds remain to memorise an additional button (if desired), starting from step 1. To terminate the acquisition process, wait 10 seconds.

The "LR" LED can also emit the following signals: 1 fast flash, if the transmitter is already memorised, 6 flashes, if the transmitter's radio encoding system is not compatible with that of the control unit's receiver, or 8 flashes, if the memory is full.

7.12.3.3 PROCEDURE C - Memorising a transmitter by means of another transmitter already memorised (memorisation far from the control unit)

This procedure can be used to memorise a new transmitter by means of a second transmitter, already memorised in the same control unit. In this way, the new transmitter can receive the same settings as those of the memorised transmitter. The user does not have to intervene directly on the control unit's **[Radio))]** button, as the procedure is simply carried out within the control unit's radius of reception.
To perform this procedure:

1. **on the transmitter to be memorised:** press and hold the button to be memorised for at least 8 seconds
2. release the transmitter button
3. **on the transmitter already memorised:** press and slowly release 3 times the memorised button to be copied
4. **on the transmitter to be memorised:** press and slowly release once the same button pressed at step 1
5. release the transmitter button.

The "LR" LED can also emit the following signals: 1 fast flash, if the transmitter is already memorised, 6 flashes, if the transmitter's radio encoding system is not compatible with that of the control unit's receiver, or 8 flashes, if the memory is full.

7.12.3.4 PROCEDURE D - Deleting ALL memorised transmitters

To perform this procedure:

1. **on the control unit:** press and hold the **[Radio))]** button
2. after roughly 4 seconds, the "**LR**" LED will light up steady (continue holding down the **[Radio))]** button
3. after roughly 4 seconds, the "**LR**" LED will turn off (continue holding down the **[Radio))]** button
4. when the "**LR**" LED starts flashing, count 2 flashes and prepare to release the button precisely during the 3rd flash that follows
5. during the deletion process, the "**LR**" LED will flash rapidly
6. the "**LR**" LED will emit 5 long flashes to signal that the deletion has been completed correctly.

7.13 LOCKING AND UNLOCKING THE MEMORY

WARNING! - This procedure locks the memory, preventing the execution of Procedures A, B, C and D described in the "*Transmitter memorisation and deletion procedures*" paragraph (page 22)

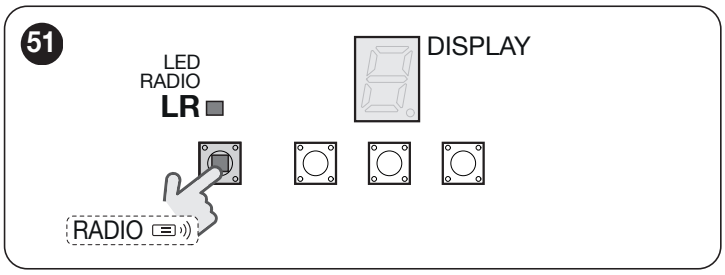

Procedure for locking/unlocking the memory:

1. disconnect the control unit from the power supply
2. press and hold the **[Radio))]** button
3. power the control unit again (by pressing down the **[Radio))]** button)
4. after 5 seconds the "**LR**" LED will emit 2 slow flashes
5. release the button **[Radio))]**
6. (within 5 seconds) repeatedly press the **[Radio))]** button to select one of the following options:
   - disabling of the memory lock function = **LED off**
   - enabling of the memory lock function = **LED on**
7. five seconds after last pressing the button, the "**LR**" LED will emit 2 slow flashes to signal the end of the procedure.

7.14 SPECIAL FUNCTIONS

7.14.1 "ALWAYS OPEN" FUNCTION

The "Always open" function is a control unit feature that enables the user to always command an opening manoeuvre when the "**Step-by-Step**" command lasts longer than 3 seconds; this is useful, for example, for connecting a timer contact to the SbS terminal in order to keep the gate open for a certain time frame.
This property is valid regardless of the "SbS" input programming; see the "***Setting the SbS operation***" chapter (page 21).

7.14.2 "MOVE ANYWAY" FUNCTION

This function can be used to operate the automation even one or more some safety devices fail to work properly or are out of order. The automation can be controlled in "**hold-to-run**" mode by proceeding as follows:

1. send a command to operate the door, using a transmitter or key selector, etc. If everything functions properly, the door will move normally, otherwise proceed with point 2
2. within 3 seconds, press the control again and hold it down
3. after roughly 2 seconds, the door will complete the requested manoeuvre in "**hold-to-run**" mode, in other words, it will continue to move so long as the control is held down.

When the safety devices fail to work, the flashing indicator will flash a few times to signal the type of problem. To verify the type of anomaly, consult the "*Signalling through warning light*" chapter (page 26).

8 TROUBLESHOOTING GUIDE

8.1 TROUBLESHOOTING

The table below contains useful instructions to resolve any malfunctions or errors that may occur during installation or in case of a fault.

Table 16

TROUBLESHOOTING	
Problems	**Recommended checks**
The radio transmitter does not control the automation and the LED on the transmitter fails to light up	Check whether the transmitter batteries are exhausted and replace them if necessary.
The radio transmitter does not control the automation but the LED on the transmitter lights up	Check whether the transmitter has been memorised correctly in the radio receiver.
No manoeuvre is commanded and the "OK" LED fails to flash	Check that the gearmotor is being powered with the mains voltage Check whether fuses **F1** and **F2** are blown; if they are, identify the cause of the failure then replace the fuses with others having the same current rating and characteristics.
No manoeuvre starts and the warning light is off	Check that the command is actually received. If the command reaches the SbS input, the "**OK**" LED must light up; if instead the radio transmitter is used, the "**LR**" LED must emit two quick flashes.
No manoeuvre starts and the warning light flashes a few times	Count the number of flashes and check the corresponding value in "***Table 20***".
The manoeuvre starts but is immediately followed by a reverse run	The selected force value may be too low to move the type of gate. Check whether there are any obstacles and, if necessary, select a higher force. Check whether a safety device connected to the Stop input has tripped.
The manoeuvre is completed correctly but the warning light does not work	Make sure that there is voltage on the warning light's FLASH terminal during the manoeuvre (being intermittent, the voltage value is not significant: roughly 10–30 V⎓); if there is voltage, the problem is due to the lamp, which must be replaced with one having the same characteristics; if there is no voltage, there may have been an overload on the FLASH output. Check that the cable has not short-circuited.

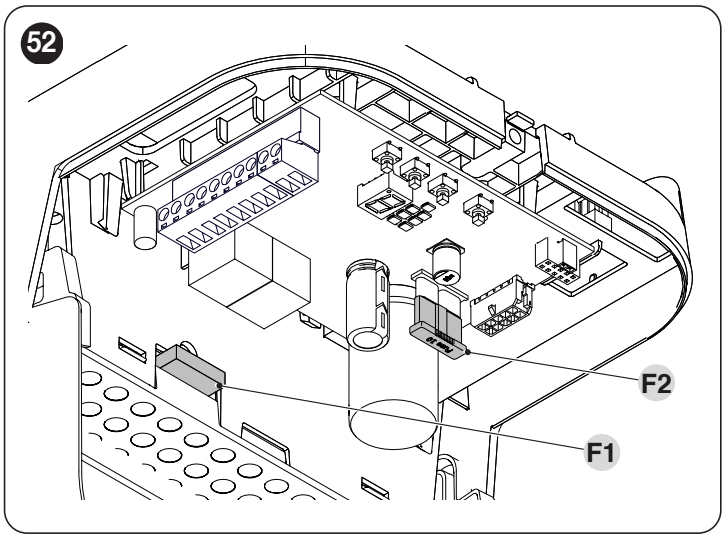

Table 17

CHARACTERISTICS OF FUSES F1 AND F2	
F1	Mains power supply fuse = 1.6 A delayed
F2	Control Unit Fuse = 2A auto type

8.2 SIGNALS ON THE CONTROL UNIT

The control unit has a series of LEDs, each of which can emit special signals both during regular operation and when an anomaly occurs.

A OK LED
B STOP LED
C Display
D Courtesy light

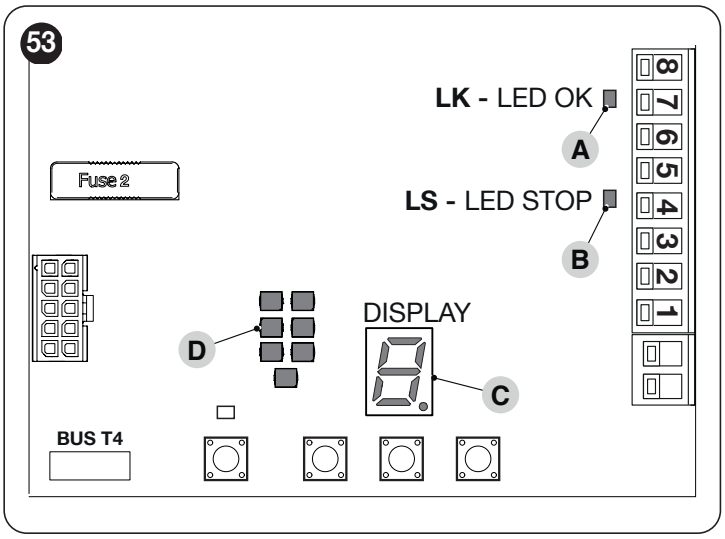

Table 18

CONTROL UNIT STATUS VISUALISATION LED		
Status	**Meaning**	**Possible solution**
OK LED		
OFF	Anomaly	Check for the presence of power; check that the fuses are not blown; if necessary, identify the cause of the fault then replace them with fuses having the same specifications.
On	Serious anomaly	There is a serious anomaly; try switching off the control unit for a few seconds; if the condition persists, it means that there is a fault and the electronic circuit board must be replaced.
1 green flash per second	All OK	Normal control unit operation.
2 quick green flashes	The status of the inputs has changed	This is normal when there is a change in one of the inputs: SbS, STOP, intervention of photocells or the radio transmitter is used.
A series of flashes separated by a 1-second pause	Various	Same signal on the warning light or courtesy light: see "***Table 20***".
Slow red and green flashing	Back-up batteries charging with the Stand-By mode on.	Normal system operation. This only occurs with back-up batteries updated for Stand-By products
STOP LED		
On	All OK	Normal operation of the STOP input.
OFF	Intervention of the STOP input	Check the devices connected to the STOP input.
Warning light	The installation procedure was not carried out.	Refer to the chapter "***Programming the door opening and closing positions***" (page 12).
Courtesy light		
On	All OK	Manoeuvre being executed or courtesy light timer in downcounting mode.
OFF	All OK	Control unit awaiting commands.
Warning light	The "Force search" procedure was not carried out	See "***Automatic force search***" (page 14).

Besides the symbols present in the programming menu, the following symbols can appear on the display to signal the status of the automation or of the current procedures.

Table 19

OPERATION SIGNALS ON THE DISPLAY		
Symbol	**Function**	**Description**
	Control unit in stand-by	Flashing: devices or positions not acquired (or error). See "***Programming the door opening and closing positions***". Steady: control unit awaiting commands.
	Automation in realignment mode	The control unit needs to be realigned because the current position memorised is not valid. All the manoeuvres will be forced on closing to reach the maximum closing position.
	Opening position programming	The control unit waits for the user to confirm the opening position.

OPERATION SIGNALS ON THE DISPLAY		
Symbol	**Function**	**Description**
C	Closing position programming	The control unit waits for the user to confirm the opening position.
O	Opening manoeuvre	Flashing: the automation is performing an opening position.
c	Closing manoeuvre	Flashing: the automation is performing a closing manoeuvre.
r	Radio programming	A procedure for memorising or deleting radio remote controls is under way.
U	Configuration not recognised	When entering one of the menus, the current configuration does not match any of the values present in the table (e.g. an intermediate value was set through Oview or app).

In the event of an anomaly, the OK LED will flash according to a specific sequence and the display will show the error code by alternating the two characters of which it is composed.

Table 20

ERROR SIGNALS ON THE DISPLAY AND OK LED			
Symbol	**OK LED red flashes**	**Cause**	**ACTION**
E.1	1 flash 1-second pause 1 flash	Max closing not detected / Ground not found	During the closing manoeuvre, the maximum limit was reached without the ground being detected. Repeat the "***Programming the door opening and closing positions***" procedure (page 12).
E.2	2 flashes 1-second pause 2 flashes	Intervention of a photocell	At the start of the manoeuvre, one or more photocells are blocking the movement; check whether there are any obstacles. During the manoeuvre, this is normal if an obstacle is present.
E.3	3 flashes 1-second pause 3 flashes	Intervention of the "Motor Force" limiter	During the movement, the door experienced excessive friction; identify the cause.
E.4	4 flashes 1-second pause 4 flashes	Triggering of the STOP input	At the start of the manoeuvre or during the movement, the STOP input intervened; identify the cause.
E.5	5 flashes 1-second pause 5 flashes	Internal parameter memorisation error	Wait at least 30 seconds then try giving a command; if the condition persists, it means that there is a serious malfunction and the electronic board must be replaced.
E.6	6 flashes 1-second pause 6 flashes	The maximum number of manoeuvres per hour limit has been exceeded	Wait a few minutes until the manoeuvre limiter drops below the maximum limit.
E.7	7 flashes 1-second pause 7 flashes	Error in the internal electric circuits	Disconnect all the power circuits for a few seconds and then try giving a command again; if the condition persists, it means there is a serious fault on the electronic board or on the motor cabling. Perform any necessary checks and replacements.
E.8	8 flashes 1-second pause 8 flashes	Command already present	Another command is already present. Remove the command present to be able to send other commands.

8.3 SIGNALLING THROUGH WARNING LIGHT

Besides signalling the current manoeuvre, the warning light can reproduce the same signals as the OK LED in case of anomaly (with the exception of the status change signal). The durations and signalling modes are the same as those of the OK LED with the exception of the number of representations, as only one cycle will be reproduced (see "***Table 20***").

This function can be configured on the FLASH (OUT1) output (see the "*Setting the FLASH function*" chapter on page 19).

8.4 SIGNALS WITH COURTESY LIGHT

Besides signalling the current manoeuvre, the courtesy light reproduces the same signals as the OK LED in case of anomaly (with the exception of the status change signal). The durations and signalling modes are the same as those of the OK LED with the exception of the number of representations, as only one cycle will be reproduced (see "***Table 20***").
However, to avoid glare-related problems, the behaviour of the courtesy light switch-on cycles varies in relation to the origin of the commands.

LOCAL COMMANDS

When a manoeuvre is started directly from the buttons of the control unit, the courtesy light is kept intentionally off. In the same way, any error representations and "force search" signals will not be reproduced.

REMOTE COMMANDS

If the manoeuvre request instead comes from a remote source (SbS input, compatible radio or BusT4 interface commands), the switching on of the courtesy light during the manoeuvre, the representation of current anomalies and the signalling of the "force search" procedure are always allowed.

9 FURTHER DETAILS (Accessories)

9.1 ADDING OR REMOVING DEVICES

Function found in the INSTALLATION menu.

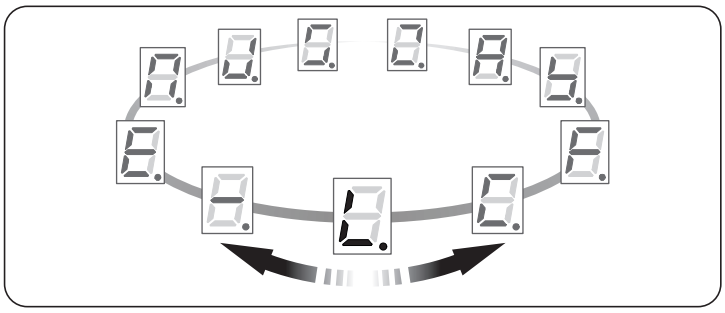

Devices can be added or removed at any time on a completed automation. In particular, various types of devices can be connected to the "**STOP**" input, as explained in the following paragraphs.
For each change made to the automation's components, it is necessary to run the procedure described here to guarantee its correct operation.

To start this procedure:

1. access the INSTALLATION menu (see the "***Programming the control unit***" chapter on page 16)
2. press and hold the **[Stop/Set]** button (roughly 6 seconds) ("***Figure 54***")

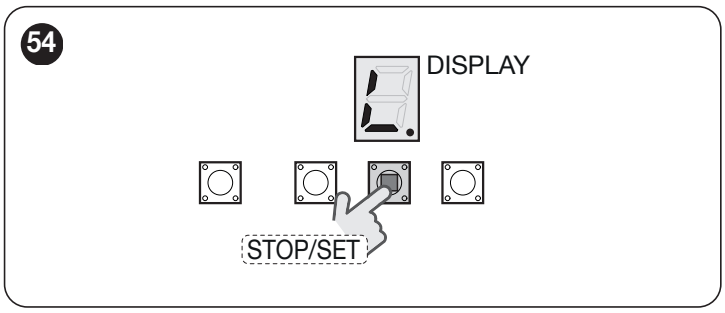

3. at the end of the device acquisition process, the display will flash slowly: release the **[Stop/Set]** button

If the symbol on the display fails to flash slowly again, wait 15 seconds without pressing any button. The control unit will automatically cancel the installation procedure. Rerun the procedure from point 1.

4. press the **[Close ▼]** button to reach the exit symbol and then press the **[Stop/Set]** button once to exit the menu.

9.1.1 STOP INPUT

STOP is the input that causes the immediate interruption of the manoeuvre, followed by a brief inversion. Devices with normally open ("NO") and normally closed ("NC") contacts, optical devices ("Opto Sensors") or devices with 8.2 kΩ fixed resistor output (such as sensitive edges) can be connected to this input.
During the device learning phase, the control unit recognises the type of device connected to the STOP input and later, during normal use of the automation, the control unit commands a STOP when it senses a change with respect to the acquired situation.

Multiple devices, even of different types, can be connected to the STOP input if suitable arrangements are made:

- Any number of NO devices can be connected to each other in parallel.
- Any number of NC devices can be connected to each other in series.
- Two devices with 8.2 kΩ fixed resistor output can be connected in parallel; if there are more than 2 devices then they must all be connected in cascade, with a single 8.2 kΩ terminating resistor.
- It is possible to combine two NO and NC contacts by placing them in parallel, while also mounting a 8.2 kΩ resistor in series with the NC contact (this also allows for combining 3 devices: NA, NC and 8.2 kΩ).
- To connect an optical device, refer to the diagram shown in "***Figure 55***". The maximum current supplied on the 12 VDC line is 15 mA.

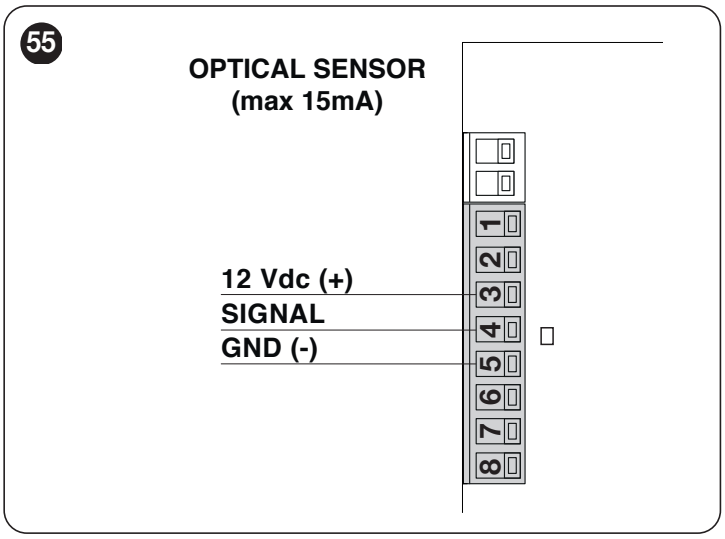

9.1.2 PHOTOCELLS WITH PHOTOTEST FUNCTION

The control unit features a PHOTOTEST function which increases the reliability of the safety devices, enabling it to be classified in Category 2 in accordance with the EN 13849-1 standard regarding the combination of the control unit and safety photocells.
Whenever a manoeuvre is started, all safety devices involved are checked and only if everything operates correctly will the manoeuvre start.
Should the test fail (photocell blinded by the sun, cables short-circuited, etc.), the fault is identified and the manoeuvre is disabled.
Connect the photocells as shown in "***Figure 56***".

The maximum usable current on the PHOTOTEST output is 15 mA.

If 2 pairs of photocells are used that interfere with one another, it is necessary to activate the "synchronisation" as described in the photocell instruction manual.

In any devices of the automation are replaced, added or removed, it is necessary to run the learning procedure (see the "*Programming the door opening and closing positions*" chapter on page 12).

To run the Phototest mode, deactivate the Stand-By mode (consult the chapter "*Setting the Stand-By mode*" on page 18) and select the Phototest function on OUT STB (consult the chapter "*Setting of the OUT STB operation*" on page 20).

Wiring diagram with relay photocells with PHOTOTEST

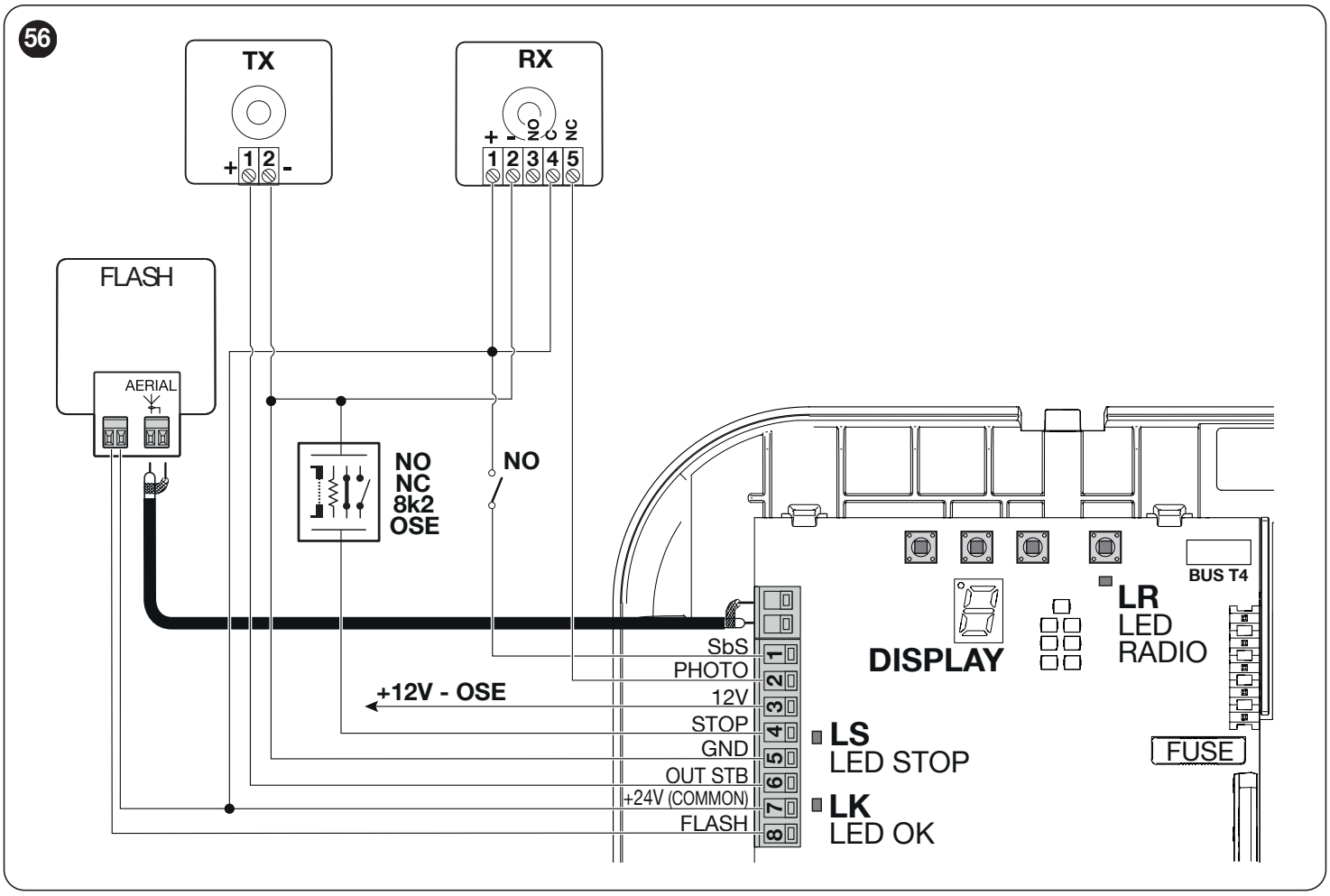

9.1.3 ELECTRIC LOCK

The OUT STB output is by default enabled for the OUT STB function, but can be programmed to control an electric lock (consult the "***Setting of the OUT STB operation***" chapter on page 20).
At the start of the opening movement, the output is activated for 2 seconds, while during the closing manoeuvre it is not activated, therefore the electric lock must reset mechanically.
The output cannot control the electric lock directly, but only loads of 24 V ⎓ 3 W.
The output must be interfaced with a relay, as shown in the figure.

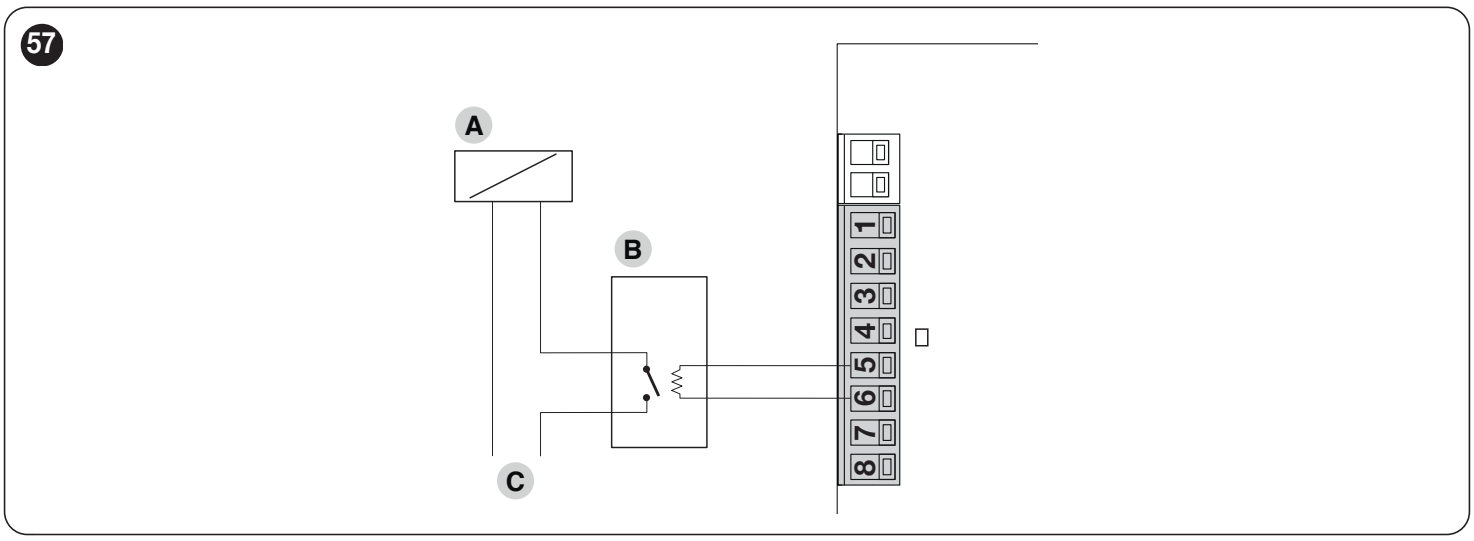

A Electric lock
B 24 V ⎓ support relay
C Electric lock power supply

9.2 CONNECTING AND INSTALLING THE EMERGENCY POWER SUPPLY

The electrical connection of the battery to the control unit must be made only after completing all the installation and programming stages, as the battery is an emergency power supply.

CAUTION: Use the backuo battery pack pre-set for Standby operation (PSS124). If the PS124 battery pack is used instead, the Standby mode must be deactivated for correct operation.

To install and connect the battery:

1. loosen the screw (**A**)
2. pull the cover (**B**) slightly outwards and turn it downwards ("***Figure 58***")

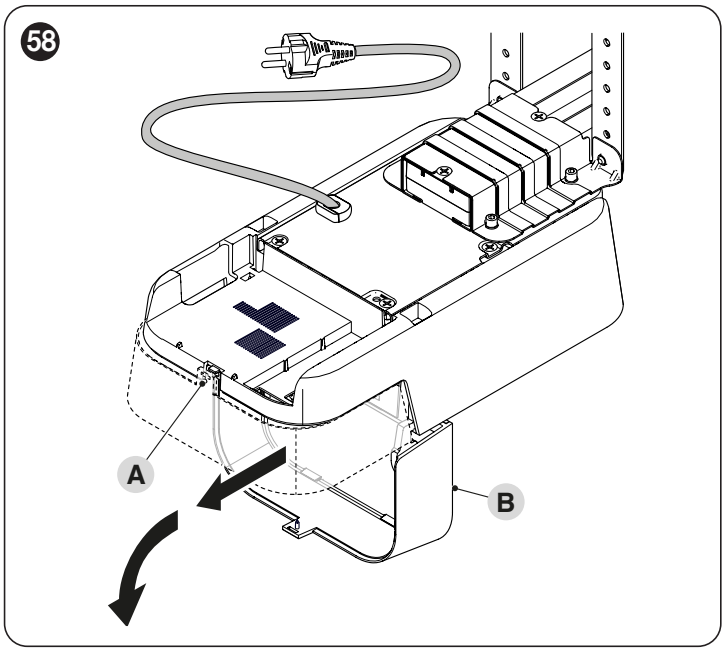

3. connect the appropriate cable to the back-up battery connector ("***Figure 59***")

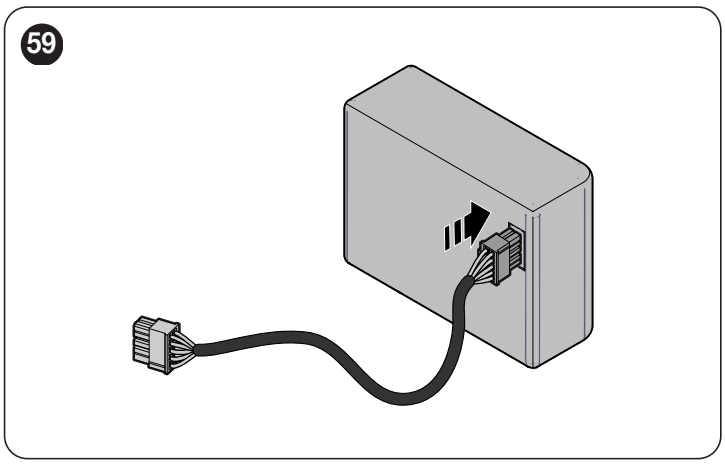

4. insert the relative connector (**C**) on the control unit ("***Figure 60***")

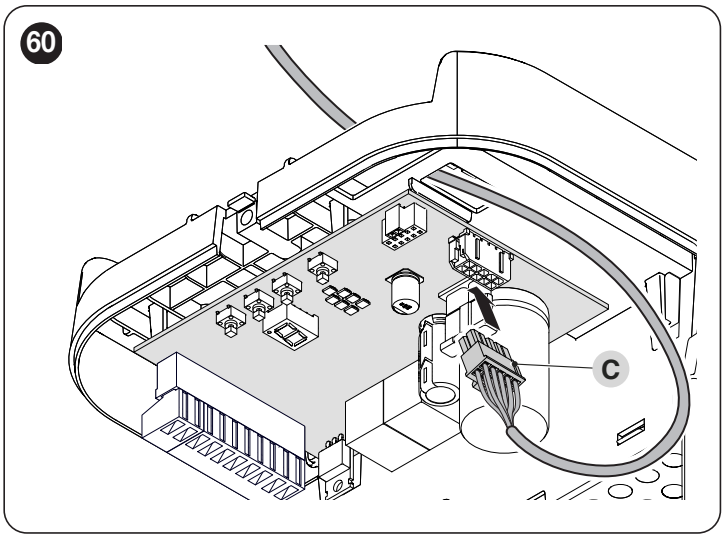

5. insert the back-up battery (**D**) into its housing inside the motor body ("***Figure 61***").

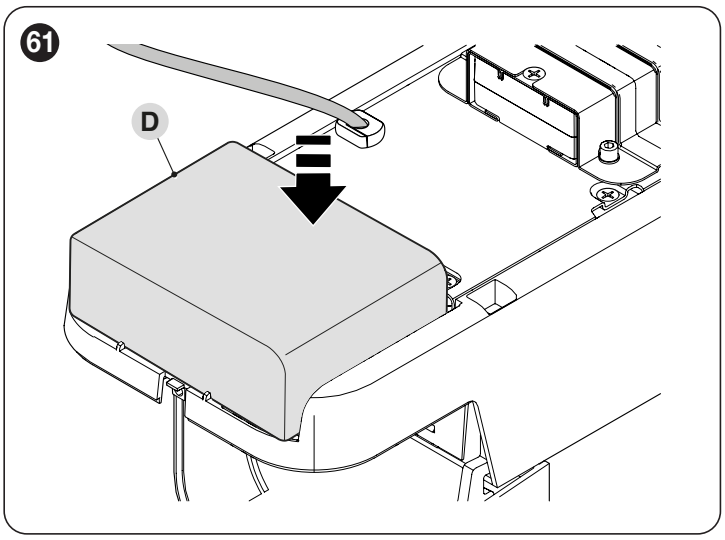

9.3 CONNECTING THE OVIEW PROGRAMMER

The control unit has a BusT4 connector to which the "**Oview**" programmer can be connected, through the IBT4N interface. The programmer allows for fully and rapidly managing the installation, maintenance and diagnosis of the entire automation.
To access the connector, proceed as shown in the figure and connect the connector to its relevant slot.

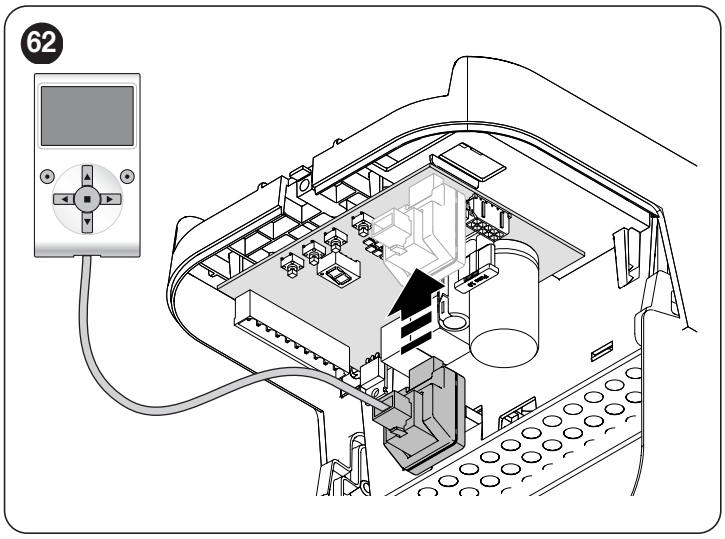

The Oview can be connected to multiple control units simultaneously (up to 16 without any particular precautions) and can be left connected to the control unit during the automation's normal operation. In this case, it can be used to send commands directly to the control unit using the specific "user" menu.
It is also possible to update the firmware. If the control unit has a radio receiver belonging to the OXI family, the "**Oview**" can be used to access the transmitter parameters memorised in the receiver.
For more detailed information, consult the respective instruction manual and the "Opera system book" manual.

9.4 WI-FI CONNECTION

SPIDO motors are configured for Wi-Fi connectivity for enabling:
- remote control of the automation (through the MyNice app)
- the installer: configuration of the automation (through the MyNice Pro app)

In particular, Wi-Fi connectivity is available with two modes:
- The BiDi-Wifi interface supplied on request as an accessory
- The Proview interface (only for the MyNice Pro app) supplied on request as an accessory

The application of the BiDi-Wi-Fi interface to the BusT4 port present on the automation must be regarded as alternative to the BiDi-ZWave interface.

To use the automation's Wi-Fi connectivity in the available modes, it is necessary to:
- Install, depending on the desired use, the MyNice app or the MyNice Pro app (reserved for the installer) available on Google Play Store and Apple App Store
- Power the automation and verify that the available Wi-Fi device switches on normally
- Launch the installed app and configure the Wi-Fi device from the "Wi-Fi interface or Accessories" menu

For further details relative to the functions linked to the MyNice Pro and MyNice apps, consult the website www.niceforyou.com.

9.4.1 BIDI-WI-FI INTERFACE

To connect the BiDi-Wi-Fi interface:
1. Disconnect the power supply to the control unit by removing the fuse F1 and, if necessary, the emergency power supply

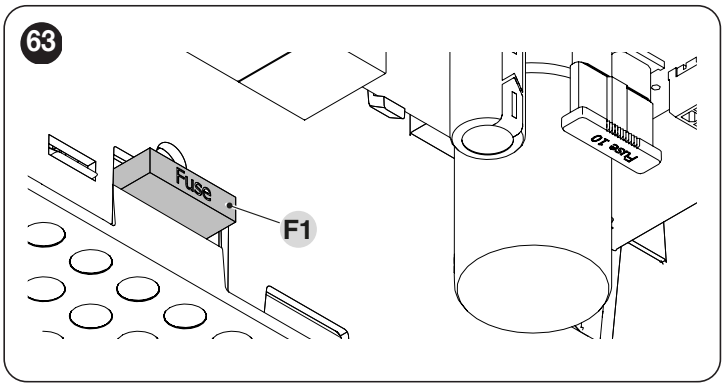

2. Verify that all the control unit LEDs are switched off before proceeding

Insert the BiDi-Wi-Fi interface in the BUS T4 connector of the control unit

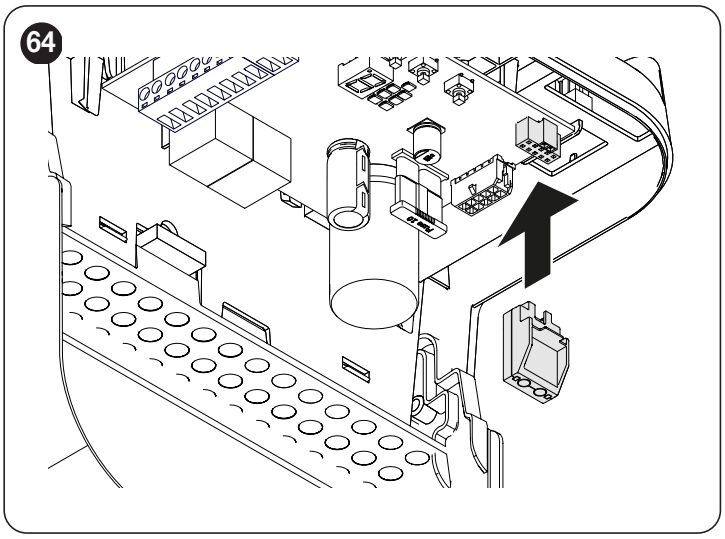

Warning! If it is not correctly inserted, the BiDi-Wi-Fi interface could get damaged or permanently damage the control unit.

3. Insert fuse F1 to switch the control unit on again
4. Wait for the **Date** LED to start flashing
5. Configure the interface through the app
6. Wait until the **Date** LED switches on and the green light stays steady lit. At this point the configuration will have been completed.

For further details relative to the functions linked to the BiDi-Wi-Fi interface, consult the website www.niceforyou.com.

YAYDOOR www.yaydoor.com

9.5 CONNECTING OTHER DEVICES

If the user needs to power external devices, such as a proximity reader for transponder cards or the light of the key selector switch, power can be tapped as shown in the figure.
The power supply voltage is **24V ⎓ -30% ÷ +50%** with a maximum available current of 100mA.

WARNING

In Stand-By mode, the power supply drops to 21V ⎓ +/- 10% with an available power of 2W.

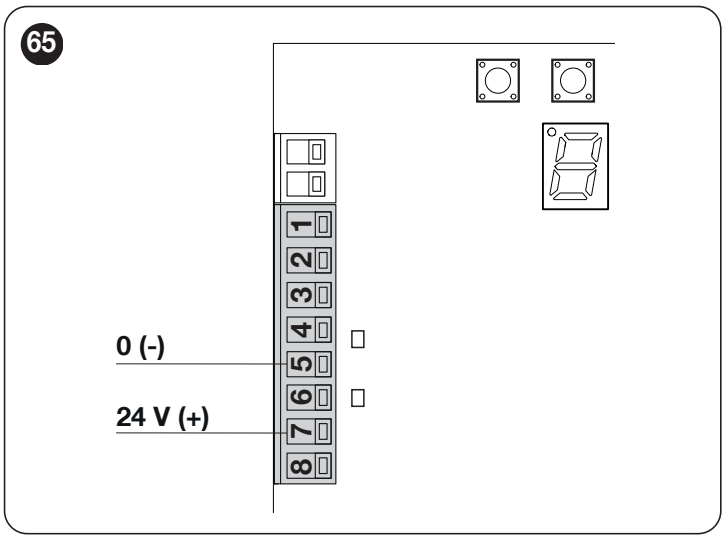

10 PRODUCT MAINTENANCE

The automation must be subjected to maintenance work on a regular basis in order to guarantee it lasts.

Maintenance must be carried out strictly in compliance with the safety provisions provided in this manual and in accordance with the laws and regulations in force.

To carry out maintenance on the gearmotor:

1. schedule maintenance interventions within maximum 6 months or after maximum 3.000 manoeuvres from the previous maintenance intervention
2. disconnect all power supplies, including any back-up batteries
3. check for any deterioration in the materials making up the automation, with special emphasis on erosion or oxidation of the structural parts; replace any parts that are not to standard
4. check the state of wear of moving parts: pinion, rack and all gate leaf components; replace any worn parts
5. connect the power supplies again and run all the tests and checks described in the "***Testing***" paragraph (page 15).

11 PRODUCT DISPOSAL

This product is an integral part of the operator and must therefore be disposed of with it.

As with the installation, only qualified personnel must dismantle the product at the end of its life.
This product is composed of different types of materials. Some of these materials can be recycled; others must be disposed of. Please enquire about the recycling or disposal systems in place in your local area for this type of product.

WARNING

Some parts of the product may contain polluting or dangerous substances. If not disposed of correctly, these substances may have a damaging effect on the environment and human health.

As indicated by the symbol shown here, this product must not been disposed of with household waste. Separate the waste for disposal and recycling, following the methods stipulated by local regulations, or return the product to the seller when purchasing a new product.

WARNING

Local regulations may impose heavy penalties if this product is not disposed of in compliance with the law.

12 TECHNICAL SPECIFICATIONS

All technical specifications stated in this section refer to an ambient temperature of 20°C (± 5°C). Nice S.p.A. reserves the right to apply modifications to the product at any time when deemed necessary, without altering its functions and intended use.

Table 21

GEARMOTOR TECHNICAL SPECIFICATIONS		
Description	**Technical specification SPIDO600**	**Technical specification SPIDO1000**
Product type	Electromechanical gearmotor for the automatic movement of garage doors for residential use, inclusive of electronic control unit	
Power supply	230V∼ (+/-10%) 50/60Hz	
Power supply /V1	120V∼ (+/-10%) 50/60Hz	
Maximum force	600 N	1000 N
Minimum force	300 N	500 N
Maximum power consumption (W)	250	300
Nominal power consumption (W)	150	280
Standby Mode Power (W)	< 0,3W (*)	
Maximum speed (m/s)	0,20	0,16
Protection rating (IP)	40	
Operating temperature (min/max °C)	-20°C ... +55°C	
Insulation class	I	
Maximum no. of cycles/day	40	100
Maximum continuous operating time	4 minutes	
Dimensions (mm)	192x344x90	
Weight (kg)	3,8	4,5
Emergency power supply	With optional accessory PSS124	
Courtesy light	Integrated with LED	
Warning light output[Note 1]	For 1 ELDC LED flashing warning light (max 200 mA)	
OUT STB output	Output for connecting photocells (max 2 transmitters per photocell) (max 15 mA)	
STOP input	For normally closed or normally open contacts, 8.2 KΩ fixed resistor contacts or OSE optical devices with self-learning function (any variation from the memorised status triggers the “STOP” command)	
SbS input	For normally open contacts (closing of the contact triggers the STEP-BY-STEP command)	
PHOTO input	For normally closed contacts (the contact’s opening triggers the photocell reopening command)	
Radio ANTENNA input	52 Ω for RG58-type cable or similar	
Programming input	For 1 OVIEW programmer with IBT4N interface or for BiDi-Wi-Fi connection interface	
Programmable functions	8 adjustable functions	
Self-learning functions	Self-learning of the type of “STOP” device (Normally Open, Normally Closed contact or 8.2 kΩ resistor) Calculation of the slowdown and partial opening points	
Use in highly acid, saline or potentially explosive atmosphere	No	

(*) Only for versions equipped with low power mode (excluding **SPIDO600/V1** - **SPIDO1000/V1**)

Note 1 The output can be programmed with other functions (see the “***Setting the FLASH function***” chapter on page 19) or through the Oview programmer or BiDi-Wi-Fi and the MyNicePRO app.

YAYDOOR www.yaydoor.com

Table 22

TECHNICAL SPECIFICATIONS OF THE RADIO RECEIVER INCORPORATED ON SPIDO600 AND SPIDO1000	
Description	**Technical specification**
Product type	4-channel receiver for incorporated radio remote control
Frequency	433.92 MHz
Encoding	Digital rolling code 72-bit Opera type
Transmitter compatibility	Supported protocols: O-Code
Memorisable transmitters	Up to 90 if memorised in Mode 1
Input impedance	52 Ω
Sensitivity	Better than 0,5 µV
Transmitter range	From 100 to 150 m. This range can vary if there are obstacles and electromagnetic disturbances, and depends on the position of the receiving antenna
Outputs	-
Operating temperature (min/max °C)	-20°C ... +55°C

Table 23

GUIDE TECHNICAL SPECIFICATIONS							
Description	**SR32C**	**SR16C**	**SR08C**	**SR32B**	**SR16B**	**SR08B**	**SR40B**
Product type	single galvanised steel profile	2-piece galvanised steel profile	single galvanised steel profile	single galvanised steel profile	2-piece galvanised steel profile	single galvanised steel profile	2-piece galvanised steel profile
Guide length	3200 mm	3200 (1600x2) mm	800 mm*	3200 mm	3200 (1600x2) mm	800 mm*	4000 mm*
Useful stroke	2800 mm	2800 mm	3500 mm**	2800 mm	2800 mm	3500 mm**	3500 mm**
Guide height	30 mm	30 mm	30 mm	30 mm	30 mm	30 mm	30 mm
Belt height	-	-	-	10 mm	10 mm	10 mm	10 mm
Belt/chain length	6185 mm	6185 mm	7747 mm	6180 mm	6180 mm	7720 mm	7856 mm

* To be used with a 3.2 m guide to reach a length of 4 m.

** Data referred to the 4 m guide.

13 CONFORMITY

EC declaration of conformity and declaration of incorporation of “partly completed machinery”

The EU declaration of conformity can be downloaded from the website www.niceforyou.com

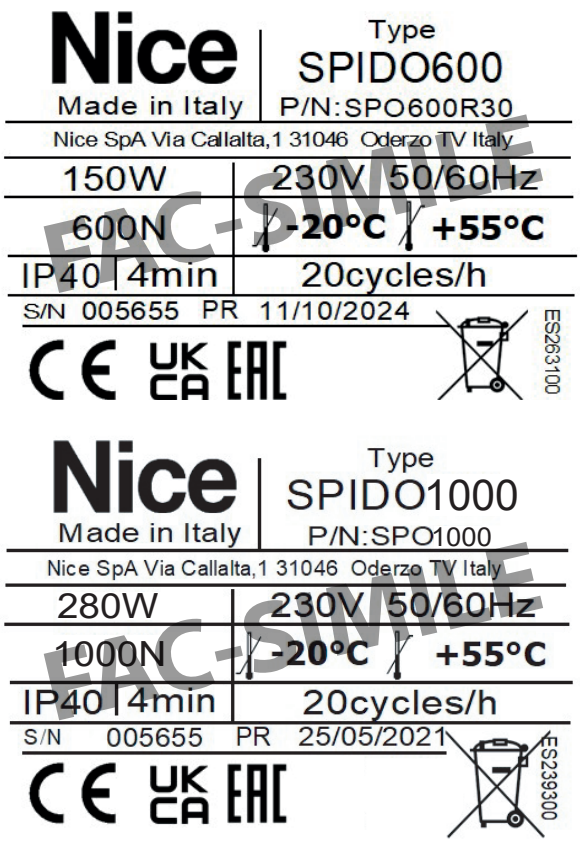

Before using the automation system for the first time, ask the installer to explain the origin of residual risks and take a few minutes and read this instructions manual and related warnings handed to you by the installer. Keep the manual for consultation when in doubt and ensure supply to new owners of the automation.

WARNING!

Your automation is a machine that faithfully executes commands imparted by the user. Negligence and improper use may lead to dangerous situations:

- do not manoeuvre the gate if there are people, animals or objects within its range of operation
- it is strictly forbidden to touch parts of the automation while it is moving
- the photocells should not be regarded as actual safety devices but only as auxiliary safety devices. They are designed using highly reliable technology, but in extreme conditions may be subject to malfunctions or potential faults, and in certain cases these faults might not be immediately evident
- periodically check that the photocells work properly.

IT IS STRICTLY FORBIDDEN to transit while the automation is closing! Transit is allowed only if the automation is fully open and stationary.

CHILDREN

An automation system guarantees a high degree of safety. With its detection systems, it can control and guarantee the gate's movement in the presence of people or objects. It is nonetheless advisable to forbid children from playing near the automation and not to leave remote controls near them to prevent any unwanted activation of the system. The automation is not a toy!

The product is not intended for use by persons, including children, with limited physical, sensory or mental capacities, or who lack experience or knowledge, unless supervised or trained in the use of the product by a person responsible for their safety.

Anomalies: if the automation shows any signs of anomalous behaviour, disconnect the power supply to the system and manually unlock the motor (see instructions at the end of the chapter) to manoeuvre the automation manually. Do not attempt any repairs personally, but contact your trusted installer.

Do not modify the system or the programming and adjustment parameters of the control unit: your installer is exclusively responsible for these operations.

Failure or lack of power supply: while waiting for the installer to intervene or the electricity to be restored, if the system is not equipped with emergency power supplies, the automation can nonetheless be used by manually unlocking the motor (see the instructions at the end of the chapter) and moving the automation manually.

Safety devices out of order: the automation can also be used when one or more safety devices are defective or out of order. The automation can be controlled in "**Hold-to-run**" mode in the following way:

1. send a command to operate the automation using a transmitter or key selector, etc. If everything works normally, the automation will move regularly, otherwise the warning light will flash a few times and the manoeuvre will not start (the number of flashes depends on the reason for which the manoeuvre cannot start)
2. in this case, within 3 seconds press the control again and hold it down
3. after roughly 2 seconds, the automation will complete the requested manoeuvre in "**Hold-to-run**" mode, in other words, it will continue to move so long as the control is held down.

If the safety devices are out of order, have the system repaired as soon as possible by a qualified technician.

The test, periodic maintenance and any repairs must be documented by the person carrying out the work and the documents must be stored by the owner of the automation. The only interventions the user may carry out periodically include cleaning of the photocell glass components (use a soft and slightly damp cloth) and removing any leaves or stones that may obstruct the automation.

Before carrying out any maintenance operations, the user of the automation must manually unlock the motor to prevent anyone from accidentally triggering the automation's movement (see the instructions at the end of the chapter).

Maintenance: in order to ensure constant levels of safety and the longest useful life for the automation, routine maintenance must be carried out (at least every 6 months).

Only qualified personnel is authorised to carry out checks, maintenance operations and repairs.

Disposal: at the end of its useful life, the automation must be dismantled by qualified personnel and the materials must be recycled or disposed of in compliance with the local regulations in force.

Replacing the remote control battery: if your remote control appears to be working poorly after some time, or stops working altogether, it may simply depend on flat batteries (depending on how much the device is used, the batteries may last from several months to over a year). You will notice this by the fact that the indicator light signalling the transmission fails to light up, is weak or lights up only for a short time. Before contacting the installer, try replacing the battery with that of another transmitter that works properly: if the anomaly is resolved, simply replace the flat battery with one of the same type.

Unlocking and manual movement

The gate can only be unlocked once the leaf has come to a standstill.

The gearmotor is equipped with a mechanical unlocking device that can be used to open and close the door manually.
These manual operations should only be performed in case of a power outage, malfunctions or during the installation phases.
To unlock the device:

1. pull the releasing cord (**A**)

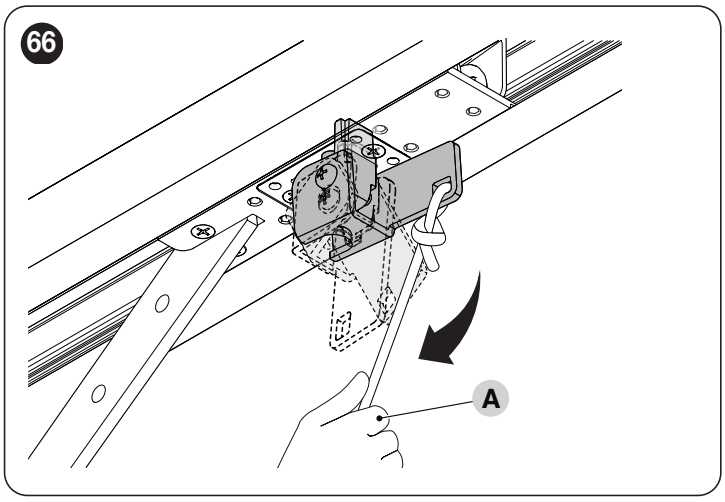

2. the door can now be moved manually to the desired position.

To lock the device:

1. pull the releasing cord (**A**)

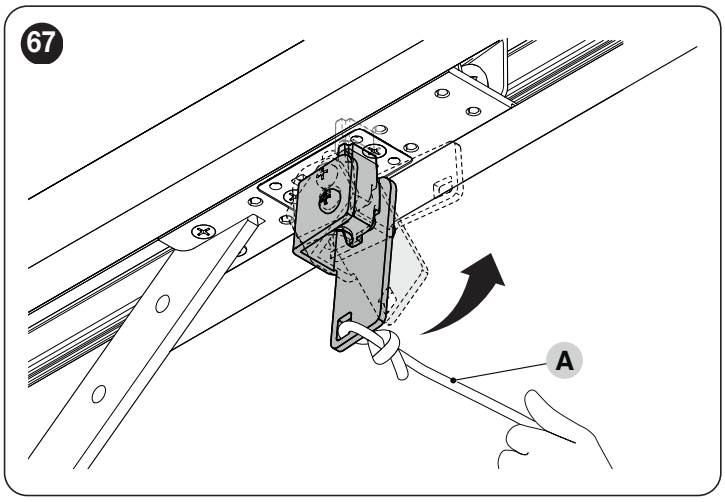

2. manually move the door to align the lower part of the motor carriage with the upper part so that it slots into place.

IS0564A04END_03-04-2025

Nice SpA
Via Callalta, 1
31046 Oderzo TV Italy
info@niceforyou.com

www.niceforyou.com